Wastewater System Improvements

City of Muskegon

Muskegon County, Michigan

Contract No. 2
Westwood Sanitary Sewer Replacement
SRF Project No. 5675-01
DWRF Project No. 7449-01

May 2019

2180552

Prein&Newhof

[Intentionally left blank]

Table of Contents

Advertisement 1-3

Instructions to Bidders 1-5

Bid Proposal Checklist 1

Bid Proposal (proposal package for submittal by Contractor) 1-6

EJCDC C-520 (2018) Standard Form of Agreement (Stipulated Price) 1-9

Bond Forms
- Performance Bond 1-4
- Payment Bond 1-4

Insurance Certificates (to be furnished by Contractor)

EJCDC C-700 (2018) Standard General Conditions 1-71

Supplementary Conditions 1-24

Insurance Specifications 1-13

Section 2 Specifications for Excavating, Trenching & Backfilling for Utilities 1-18

Section 3 Specifications for Surface Restoration 1-10

City of Muskegon Specifications for Water Mains 1-17

Section 5 Specifications for Storm Sewer 1-21

Section 6 Specifications for Sanitary Sewer 1-24

Project Specifications 1-20

Drawings 1-10

Appendix A: SRF and DWRF Standard Contract Language 1-24

[Intentionally left blank]

Advertisement

Owner:	City of Muskegon		
Project Title:	Westwood Sanitary Sewer Replacement, Contract No. 2		
Project #:	2180552	SRF Project #:5675-01	DWRF Project#: 7449-01

1. RECEIPT OF BIDS

   Sealed bids for the above project will be received by City of Muskegon of 933 Terrace Street, Muskegon, Michigan until:

   2:00 P.M. (local time) on Thursday, June 27, 2019

   at which time the bids will be publicly opened and read aloud.

2. PRE-BID MEETING

   A bidders information meeting will be held at the City of Muskegon City Hall, 933 Terrace Street, Muskegon, MI 49440 on Monday, June 10 at 2:00 P.M. Attendance at the bidders information meeting is **mandatory** for all General Contractors wishing to submit a bid on the project. Minutes of the bidders information meeting will be forwarded to all plan holders as an addendum. This pre-bid meeting will provide information for all SRF/DWRF funded projects being bid out by the City of Muskegon. The pre-bid meeting will follow the following agenda (all times after 2:00 PM are subject to change):

   2:00 – General SRF/DWRF Project requirements (applies to all contracts)
   2:15 – Beidler Sanitary Sewer Replacement
   2:45 – Westwood Sanitary Sewer Replacement
   3:10 – Jefferson/Strong Sanitary Sewer Replacement
   3:30 – Spring Street Sewer Reroute & Bourdon Street Alley Sewer
   4:00 – 9th Street Sewer Reroute & Getty Force Main Replacement

3. SCOPE OF PROJECT

   The project consists of furnishing all material and constructing the following approximate quantities:

   - 2,055 ft. of 8-inch to 12-inch sanitary sewer
   - 1,250 ft. of 10-inch to 15-inch storm sewer
   - 1,635 ft. of 8-inch water main
   - 27 full water service replacements
   - 1,760 ft. of road reconstruction

   Including all necessary appurtenances and restoration.

4. EXAMINATION OF SPECIFICATIONS

Contract documents may be examined online at https://www.muskegon-mi.gov/muskegon/bid-postings or at the offices of:

City of Muskegon, 933 Terrace Street, Muskegon, MI 49440
Prein&Newhof, 4910 Stariha Drive, Muskegon, MI 49441
Prein&Newhof, 3355 Evergreen Drive NE, Grand Rapids, MI 49525
And some local plan rooms.

5. DEPOSIT FOR DRAWINGS AND SPECIFICATIONS

Drawings and specifications are available online at https://www.muskegon-mi.gov/muskegon/bid-postings. Bidder assumes sole risk for any project specifications and drawings, electronic or hard copy, obtained other than directly from the City of Muskegon. Hard copy drawings and specifications are available for the fee of 40 dollars from the City of Muskegon. Fees are payable by cash or check only and are not refunded.

6. DISADVANTAGED BUSINESS ENTERPRISES (DBE)

The Prime Contractor is hereby notified that their bidding on this project must follow, document, and maintain documentation of their Good Faith Efforts to ensure that DBEs have the opportunity to participate in the project by increasing DBE awareness of procurement efforts and outreach.

Posting solicitations for quotes/proposals from DBEs on the Michigan Infrastructure and Transportation Association (MITA) website in accordance with conditions detailed in Exhibit 1 is recommended (www.mitadbe.com).

Soliciting DBEs for bids can also take the form of direct emails, phone solicitations, posting a notice on your Website, etc. See the Proposal Checklist and Appendix A for additional requirements.

7. FUNDING

The work to be performed under this contract will be financed and paid for by funds received from by the Michigan Department of Environment, Great Lakes, and Energy (EGLE) State Revolving Fund (SRF), the EGLE Drinking Water Revolving Fund (DWRF) and with City of Muskegon local funds. SRF and DWRF monies will be received by the City of Muskegon. **Davis-Bacon/Prevailing Federal Wages apply to this project.**

Federal Labor Standards Provisions and associated documents that are incorporated in this contract are included in Exhibit 1. The SRF Project Number is 5675-01. The DWRF Project Number is 7449-01.

The Contractor also will be required to comply with the debarment and American Iron and Steel contractual language included in Appendix A.

8 BID SURETY

A bid bond, certified check, or cashier's check payable to City of Muskegon in an amount equal to five percent (5%) of the total price shall accompany each bid. This surety shall bind the bidder for a period of one hundred twenty (120) days after the receipt of bids.

9. COMPLETION DATE

All work shall be substantially completed (Roads open to traffic) on October 16, 2020. Final restoration and project completion shall occur on or before October 30, 2020**.**

Ann Marie Meisch
Muskegon City Clerk
933 Terrace Street
Muskegon, MI 49440
231-724-6705

[Intentionally left blank]

Instructions To Bidders

Owner:	City of Muskegon, Muskegon County, Michigan				
Project Title:	Westwood Sanitary Sewer Replacement, Contract No. 2				
Project #:	2180552	SRF Project #:	5675-01	DWRF Project #:	7449-01

1. CONTRACT DOCUMENTS

   The contract documents consist of material outlined in Article 9 of the Agreement. Each Bidder shall carefully examine his copy of the contract documents for completeness. No claim will be allowed on the basis that the contract documents are not complete.

2. INTERPRETATION OF THE CONTRACT DOCUMENTS

   It is the intent of these contract documents to be clear, complete and consistent. If Bidder is of the opinion that any portion of the contract documents is ambiguous, inconsistent or contains errors or omissions Bidder shall, prior to submitting its bid, in writing request Engineer to clarify that portion of the contract documents as an addendum. This interpretation or correction will be made a part of the contract documents as an addendum. Any such addendum shall be mailed, faxed, e-mailed or delivered only to each person recorded as having received/downloaded a copy of the contract documents directly from the City of Muskegon or who was recorded of being in attendance at the mandatory pre-bid meeting.

   Only written addenda issued by the Engineer shall be binding. Oral interpretations, information or instructions by any office or employee of the Owner or Engineer are not authorized and therefore are not binding.

   Questions related to the project should be directed to Matthew Hulst, P.E., at 231-798-0101 or via email at mhulst@preinnewhof.com.

   Any conclusions or information obtained or derived from Contract Documents will be at the user's sole risk. The City of Muskegon will maintain the master copy (hard copy). In the case of any contract discrepancy, the Master Copy (hard copy) shall be considered the controlling document.

3. BIDDERS INVESTIGATION

   The Bidder will be responsible for inspecting the site of the proposed work to determine for himself all conditions under which he will be obligated to work. It is also expected that he will investigate and make his own determination concerning the available facilities for receiving, transporting, handling and storing construction equipment and materials, and concerning other local conditions that may affect his work.

4. DISADVANTAGED BUSINESS ENTERPRISES (DBE)

The Prime Contractor is hereby notified that their bidding on this project must follow, document, and maintain documentation of their Good Faith Efforts to ensure that DBEs have the opportunity to participate in the project by increasing DBE awareness of procurement efforts and outreach.

Posting solicitations for quotes/proposals from DBEs in the Michigan Infrastructure and Transportation Association (MITA) website in accordance conditions detailed Appendix A is recommended (www.mitadbe.com).

Soliciting DBEs for bids can also take the form of direct emails, phone solicitations, posting a notice on your Website, etc. See the Proposal Checklist and Appendix A for additional requirements.

5. BID PROPOSAL PREPARATION

A. Name, Address and Legal Status of Bidder

The name and legal status of the Bidder, Corporation, Partnership or an Individual, shall be stated in the Proposal. A corporation Bidder shall name the state in which its Articles of Incorporation are held, and must give the title of the official having authority, under the by-laws, to sign contracts. A partnership Bidder shall give the full names and addresses of all partners. An L.L.C. Bidder shall provide the full names and addresses of all members.

Anyone signing a proposal as an agent of another must submit, with his proposal, legal evidence of his authority to act as an authorized agent of the party.

The place of residence of each Bidder, or the office address in the case of a firm or company, with county and state, must be given after a signature.

B. Bid Surety

See ADVERTISEMENT “BID SURETY”

C. Proposal Form

The Bidder is to complete the Bid Proposal Documents that are included in the Project Specification book (online or hard copy), referring to the table of contents to identify the exact order of these documents. Regardless of how the bid documents are received, a hard copy (paper copy) of the Bid Proposal Documents must be submitted for bidding purposes. *No electronically-submitted Proposals will be accepted.* The Bid Proposal Documents include: Bid Proposal Checklist, Bid Proposal, and Bid Proposal – Unit Prices.

The Bidder must provide the signed Bid Proposal Documents in either type written or hand written (in ink) form and clearly and completely set forth all required lump sum

amounts, unit prices or other costs in a legible and understandable manner. Illegibility of any work or figure in the proposal may be sufficient cause for rejection of the proposal by the Owners. *No electronically-submitted Proposals will be accepted.*

Each proposal must be enclosed in a sealed envelope addressed to City of Muskegon, 933 Terrace Street, Muskegon, MI 49440 and labeled "**Proposal for City of Muskegon, Muskegon County, Michigan, Westwood Sanitary Sewer Replacement, Contract No. 2, SRF Project No. 5675-01, DWRF Project No. 7449-01**." No electronically submitted Proposals will be accepted.

D. Proposal Data

Proposals shall be carefully prepared in strict accordance with contract requirements and these instructions and shall include all pertinent information required by the proposal form. Failure of the bidder to comply in any respect shall be grounds for rejection of the bidder's proposal.

The proposal for work is on a unit price basis

The bids will be based on the comparison of totals of the extensions of the stated unit prices. In case of an error in preparation of the bid form, the unit prices will be used.

No partial bids will be considered.

E. Experience and Qualifications

It is the intention of the Owner to award this contract to a Bidder that will perform and complete all work in compliance with the Contract Documents and in a workmanlike and professional manner. Bids are therefore only solicited from responsible Bidders known to be skilled, experienced and regularly engaged in work of similar character and magnitude to that covered by these contract documents.

After the opening of bids, when so requested by the Owner or Engineer, the Bidder will be required to provide documentation of the extent and nature of his experience in work of this kind and to furnish references as to his experience on projects of similar types and concerning contractor's ability to timely and within budget perform work of the type involved in this project. The successful Bidder shall submit a statement of his experience and financial status, a list of all jobs he now has underway, with the volume and percent completed. If the successful Bidder is an LLC, bidder shall provide, if requested, personal guarantees of its members.

In addition to the above, when so requested, the Bidder shall meet with the Owner's representatives and give further information in relation to his proposed construction plan, methodology, and schedule of operations, in order to determine the Bidder's qualifications, ability to perform the Work, and timely complete the Work in accordance with the contract requirements.

F. Return of Bid Deposits

The bid deposits of all Bidders, except the three lowest Bidders, will be returned within seven days after the opening of the bids. The bid deposits of the three lowest Bidders will be returned (1) within 48 hours after the contract shall have been awarded to the successful Bidder, the signed agreement has been delivered, and the required bonds have been approved by the Owner, or (2) after rejection of all bids.

G. Certification Regarding Debarment, Suspension, and Other Responsibility Matters

A signed Certification Regarding Debarment, Suspension, and Other Responsibility Matters shall be required for each successful bidder or supplier who provides a service of $25,000 or more. A copy of this form is included in the Contract Documents and shall be required prior to tentative award of the project.

H. Completion Date

All work shall be substantially completed (Roads open to traffic) on October 16, 2020. Final restoration and project completion shall occur on or before October 30, 2020. Upon start of construction, work shall continuously progress towards completion.

6. FUNDS AVAILABLE

The work to be performed under this contract will be financed and paid for by the Michigan Department of Environment, Great Lakes & Energy (EGLE) State Revolving Fund (SRF), EGLE Drinking Water Revolving Fund (DWRF), and with City of Muskegon local funds. SRF and DWRF monies will be received by City of Muskegon. **Davis-Bacon/Prevailing Federal Wages apply to this project.** Federal Labor Standards Provisions and associated documents that are incorporated in this contract are included in Appendix A. The SRF Project Number is 5675-01; the DWRF Project Number is 7449-01.

The Contractor also will be required to comply with the debarment and American Iron and Steel contractual language included in Appendix A.

7. AMERICAN IRON AND STEEL

The Consolidated Appropriations Act, 2014, H.R. 3547 added an “American Iron and Steel” requirement to the existing State Water Revolving Fund (SRF) and Drinking Water Revolving Fund (DWRF). Therefore, all iron and steel products used in this project shall be produced in the United States. “Iron and steel products” for the purposes of this requirement means the following products made primarily of iron or steel: lined or unlined pipes and fittings, manhole covers and other municipal castings, hydrants, tanks, flanges, pipe clamps and restraints, valves, structural steel, reinforced precast concrete, and construction materials.

Contractor shall comply with the “American Iron and Steel Contract Language” included in Appendix A.

8. WITHDRAWAL OF BIDS

Any Bidder who has submitted a proposal to the Owner may withdraw his bid at any time prior to the scheduled time for opening bids. No Bidder may withdraw his bid after the opening for a period of one hundred twenty (120) days thereafter.

9. AWARD AND EXECUTION OF THE CONTRACT

The contract shall be deemed as having been awarded when formal Notice of Award shall have been duly provided by the Owner upon the Bidder. Notice of Award will be issued within sixty (60) days of the EGLE "Order of Approval" (August 9, 2019), contingent upon the successful sale of bonds by the State Treasury.

The Bidder to whom the contract shall have been awarded will be required to execute an Agreement in the form included in the Contract Documents and to furnish sureties, insurance policies and certificates all as required within fifteen (15) days after the award. In case of his refusal or failure to do so, he will be considered to have abandoned all his rights and interest in the award, and his bid deposit may be declared forfeited to the Owner and the work may be awarded to another Bidder.

10. PERMITS

The Owner will obtain the Act 399, permit from the Michigan Department of Environment, Great Lakes & Energy for the water supply system construction. Copies of the permit will be forwarded to the Contractor once they are received.

The Owner will obtain the Part 41, permit from the Michigan Department of Environment, Great Lakes & Energy for the sanitary sewer system construction. Copies of the permit will be forwarded to the Contractor once they are received.

The Owner will obtain a soil erosion control (SESC) permit from the Muskegon County Department of Public Works. The Contractor shall have a certified storm water operator responsible for monitoring and reporting in accordance with the regulatory agency requirements.

The Contractor shall comply with all permit conditions. Copies of the Owner-obtained permits will be forwarded to the Contractor when they are received. The Contractor shall obtain all permits necessary for construction of this project not obtained by the Owner. The Contractor shall pay for any charges or bonds required by agencies for permits, inspections or similar charges to construct this project as shown on the drawings. The Contractor shall complete all work according to the permits and will be responsible for any fines that may be incurred due to failure to meet any of the conditions of the permits.

[Intentionally left blank]

Bid Proposal Checklist

Owner:	City of Muskegon, Muskegon County, Michigan				
Project Title:	Westwood Sewer Replacement, Contract No. 2				
Project #:	2180552	SRF Project #:	5675-01	DWRF Project #:	7449-01

This checklist is for the bidder's convenience and the Engineer's use. It should be reviewed thoroughly before submitting a bid.

- ☐ Bid submitted on time.
- ☐ Bid surety properly completed and enclosed.
- ☐ Addenda, if applicable, has been acknowledged and any revisions to the proposal completed.
- ☐ Bid proposal legally signed in ink.
- ☐ All prices are completed in ink.
- ☐ Completed Disadvantaged Business Enterprise (DBE) and Debarment Certification documents:
    1. DBE *"Good Faith Efforts Worksheet"* for each area of work type to be subcontracted. See *"Instructions to Bidder for the Completion of the Good Faith Efforts Worksheet"* included in Appendix A
    2. Copy of posting, on the MITA website, soliciting for quotes/proposals from DBE's, if utilized
    3. Certification Regarding Debarment, Suspension, and other Responsibility Matters

[Intentionally left blank]

Bid Proposal

Owner:	City of Muskegon, Muskegon County, Michigan		
Owner Address:	933 Terrace Street, Muskegon, MI 49440		
Project Title:	Westwood Sanitary Sewer Replacement, Contract No. 2		
Bid Date & Time:	June 27, 2019 at 2:00 P.M.	Project #:	2180552
SRF Project No.	5675-01	DWRF Project No.	7449-01

The undersigned, being familiar with the site, plans, specifications, and related documents, proposes to furnish all required labor, materials, tools and equipment to construct the project in accordance with the unit prices on the following sheets.

Date Prepared: _____

Receipt of Addenda

Receipt of Addenda _____ through _____ is hereby acknowledged.

Summary of Bids

Total Bid $ _____

The Owner reserves the right to accept or reject any or all bids and to waive any irregularities in the bidding. No partial bids will be accepted.

Contractor's Signature

Contractor's Name		Telephone Number
Business Address	City	Zip Code
Signature	Title	Date

Seal (if bidder is a corporation)

[Intentionally left blank]

Bid Proposal – Supplemental Information

Owner:	City of Muskegon, Muskegon County, Michigan		
Owner Address:	933 Terrace Street, Muskegon, MI 49440		
Project Title:	Westwood Sanitary Sewer Replacement, Contract No. 2		
Bid Date & Time:	June 27, 2019 at 2:00 P.M.	Project #:	2180552
SRF Project No.	5675-01	DWRF Project No.	7449-01

I. SUBCONTRACTORS

This bid is submitted on the basis of using the following subcontractors:

Concrete _____

Asphalt Paving _____

No change from the subcontractors listed above will be allowed after the Proposal is submitted except by mutual consent of the Contractor and Owner in writing.

[Intentionally left blank]

Bid Proposal - Unit Prices

Owner:
City of Muskegon

Project Title:
Westwood Sanitary Sewer Replacement, Contract No. 2

Bid Date & Time:
6/27/2019 at 2:00 PM

Project #:
2180552

SRF Project No.
5675-01

DWRF Project No.
7449-01

SRF Eligible

Item No.	Description	Quantity	Unit	Unit Price	Total Amount
1	Mobilization, Max, 10%	1	Lsum		
2	Traffic Control	1	Lsum		
3	Minor Traf Devices	1	Lsum		
4	Tree, Rem, 6 inch to 18 inch	2	Ea		
5	Tree, Rem, 19 inch to 36 inch	1	Ea		
6	Dr Structure, Rem	26	Ea		
7	Sewer Rem, Less than 24 inch	2,200	Ft		
8	Sewer, Abandon	1,080	Ft		
9	Curb and Gutter Rem	3,380	Ft		
10	Pavt, Rem	640	Syd		
11	HMA Surface, Rem	4,910	Syd		
12	Sidewalk, Rem	30	Syd		
13	Erosion Control, Inlet Protection, Fabric Drop	3	Ea		
14	Machine Grading, Modified	18	Sta		
15	Aggregate Base, 8 inch, Modified	4,910	Syd		
16	HMA, 13A	850	Ton		

[Intentionally left blank]

Item No.	Description	Quantity	Unit	Unit Price	Total Amount
17	Driveway, Nonreinf Conc, 6 inch	640	Syd		
18	Curb and Gutter, Conc. Det F4	3,380	Ft		
19	Sidewalk, Conc, 4 inch	270	Sft		
20	Turf Restoration	20	Sta		
21	Valve Box, Adjust	1	Ea		
22	Sanitary Sewer, 8", Tr Det B	2,039	Ft		
23	Sanitary Sewer, 12", Tr Det B	16	Ft		
24	Sanitary Manhole, 48 inch Dia	11	Ea		
25	Sanitary Drop Manhole, 48 inch Dia	2	Ea		
26	Sanitary Sewer, Wye, 8 inch x 6 inch	28	Ea		
27	Sanitary Lateral, 6 inch, Public	755	Ft		
28	Sanitary Lateral, Connect to Ex.	28	Ea		
29	Sanitary Sewer, Connect to Ex. 8"	2	Ea		
30	Sanitary Sewer, Connect to Ex. 12"	1	Ea		
31	Sanitary Sewer, Connect to Ex. 18"	1	Ea		
32	Sanitary Sewer, Plug, 8 inch	1	Ea		
33	Sanitary Sewer, CCTV	2,055	Ft		
34	Sewer, Cl E, 10 inch, Tr Det B	13	Ft		
35	Sewer, Cl E, 12 inch, Tr Det B	476	Ft		
36	Sewer, Cl E, 15 inch, Tr Det B	760	Ft		
37	Sewer, Connect to Ex. 10"	1	Ea		
38	Sewer, Connect to Ex. 12"	1	Ea		

[Intentionally left blank]

Item No.	Description	Quantity	Unit	Unit Price	Total Amount
39	Dr Structure, 48 inch dia	16	Ea		
40	Dr Structure Cover, Type B	4	Ea		
41	Dr Structure Cover, Type K	12	Ea		
42	Dr Structure Cover Adj, Case 1	1	Ea		
	SRF Eligible Total:				

DWRF Eligible

43	Water Main, DI, 6 inch, Tr Det G	89	Ft		
44	Water Main, DI, 8 inch, Tr Det G	1,631	Ft		
45	Water Main, Bend, 45 Degree, 8 inch	8	Ea		
46	Water Main, Bend, 11 1/4 Degree, 8 inch	1	Ea		
47	Water Main, Reducer, 8 inch x 6 inch	2	Ea		
48	Water Main, Reducer, 12 inch x 8 inch	1	Ea		
49	Water Main, Sleeve, 6 inch	1	Ea		
50	Water Main, Sleeve, 8 inch	1	Ea		
51	Water Main, Tee, 8 inch x 8 inch x 6 inch	6	Ea		
52	Water Main, Tee, 8 inch x 8 inch x 8 inch	1	Ea		
53	Water Main, Cross, 8-inch x 8-inch x 8-inch x 8-inch	1	Ea		
54	Water Service, Corporation Stop, 1 inch	28	Ea		
55	Water Service, Corporation Stop, 2 inch	1	Ea		
56	Water Service, Curb Stop and Box, 1 inch	27	Ea		
57	Water Service, 1 inch	3,035	Ft		
58	Water Service, 2 inch	35	Ft		
59	Hydrant, Rem	4	Ea		

[Intentionally left blank]

Item No.	Description	Quantity	Unit	Unit Price	Total Amount
60	Hydrant	6	Ea		
61	Water Main, Abandon	1,965	Ft		
62	Water Main, Rem	60	Ft		
63	Water Main, Valve and Box, 6 inch	6	Ea		
64	Water Main, Valve and Box, 8 inch	4	Ea		
65	Water Main, Cap, 8 inch	2	Ea		
66	Water Service Restoration, Private	15	Ea		
	DWRF Eligible Total:				

Non-Eligible

67	Sanitary Lateral, 6 inch, Private	1,295	Ft		
68	Sanitary Cleanout	21	Ea		
69	Sanitary Lateral Restoration, Private	14	Ea		
	Non Eligible Total:				
				Total Bid:	

Alternate No. 1

70	Sanitary Lateral, 6 inch, Private	1	Ft		
71	Sanitary Lateral Restoration, Private	1	Ea		

[Intentionally left blank]

AGREEMENT BETWEEN OWNER AND CONTRACTOR FOR CONSTRUCTION CONTRACT (STIPULATED PRICE)

This Agreement is by and between City of Muskegon, 933 Terrace Street, Muskegon, MI 49440 ("Owner") and [Contractor Name & Address] ("Contractor").

Terms used in this Agreement have the meanings stated in the General Conditions and the Supplementary Conditions.

Owner and Contractor hereby agree as follows:

ARTICLE 1—WORK

1.01 Contractor shall complete all Work as specified or indicated in the Contract Documents. The Work is generally described as follows:

Reconstruction of Westwood Street and Glen Avenue from Randolph Avenue to Wickham Avenue and replacement of existing sanitary sewer, water main, and storm sewer including the following approximate quantities:

- 2,055 ft. of 8-inch to 12-inch sanitary sewer
- 1,250 ft. of 10-inch to 15-inch storm sewer
- 1,635 ft. of 8-inch water main
- 27 full water service replacements
- 1,760 ft. of road reconstruction

Including all associated appurtenances and restoration

ARTICLE 2—THE PROJECT

2.01 The Project, of which the Work under the Contract Documents is a part, is generally described as follows:

Wastewater System Improvements
Contract 2
Westwood Sanitary Sewer Replacement
SRF Project No. 5675-01
DWRF Project No. 7449-01

ARTICLE 3—ENGINEER

3.01 The Owner has retained Prein&Newhof, *4910 Stariha Drive, Muskegon, MI 49441* ("Engineer") to act as Owner's representative, assume all duties and responsibilities of Engineer, and have the rights and authority assigned to Engineer in the Contract.

3.02 The part of the Project that pertains to the Work has been designed by Prein&Newhof.

Copyright© 2018 National Society of Professional Engineers, American Council of Engineering Companies, and American Society of Civil Engineers. All rights reserved.

ARTICLE 4—CONTRACT TIMES

4.01 *Time is of the Essence*

A. All time limits for Milestones, if any, Substantial Completion, and completion and readiness for final payment as stated in the Contract Documents are of the essence of the Contract.

4.02 *Contract Times: Dates*

A. The Work will be substantially complete on or before **October 16, 2020**, and completed and ready for final payment in accordance with Paragraph 15.06 of the General Conditions on or before **October 30, 2020**.

4.03 *Contract Times: Days*

A. The Work will be substantially complete within **84** days after the date when the Contract Times commence to run as provided in Paragraph 4.01 of the General Conditions, and completed and ready for final payment in accordance with Paragraph 15.06 of the General Conditions within **98** days after the date when the Contract Times commence to run.

~~4.04 *Milestones*~~

~~A. Parts of the Work must be substantially completed on or before the following Milestone(s):~~

~~1. Milestone 1 **[event & date/days]**~~

~~2. Milestone 2 **[event & date/days]**~~

~~3. Milestone 3 **[event & date/days]**~~

4.05 *Liquidated Damages*

A. Contractor and Owner recognize that time is of the essence as stated in Paragraph 4.01 above and that Owner will suffer financial and other losses if the Work is not completed and Milestones not achieved within the Contract Times, as duly modified. The parties also recognize the delays, expense, and difficulties involved in proving, in a legal or arbitration proceeding, the actual loss suffered by Owner if the Work is not completed on time. Accordingly, instead of requiring any such proof, Owner and Contractor agree that as liquidated damages for delay (but not as a penalty):

1. *Substantial Completion:* Contractor shall pay Owner $1,000 for each day that expires after the time (as duly adjusted pursuant to the Contract) specified above for Substantial Completion, until the Work is substantially complete.

2. *Completion of Remaining Work:* After Substantial Completion, if Contractor shall neglect, refuse, or fail to complete the remaining Work within the Contract Times (as duly adjusted pursuant to the Contract) for completion and readiness for final payment, Contractor shall pay Owner $500 for each day that expires after such time until the Work is completed and ready for final payment.

~~3. *Milestones:* Contractor shall pay Owner $**[number*]** for each day that expires after the time (as duly adjusted pursuant to the Contract) specified above for achievement of Milestone 1, until Milestone 1 is achieved, or until the time specified for Substantial Completion is reached, at which time the rate indicated in Paragraph 4.05.A.1 will apply, rather than the Milestone rate.~~

Copyright© 2018 National Society of Professional Engineers, American Council of Engineering Companies, and American Society of Civil Engineers. All rights reserved.

4. Liquidated damages for failing to timely attain Substantial Completion and final completion are not additive, and will not be imposed concurrently.

B. If Owner recovers liquidated damages for a delay in completion by Contractor, then such liquidated damages are Owner's sole and exclusive remedy for such delay, and Owner is precluded from recovering any other damages, whether actual, direct, excess, or consequential, for such delay, except for special damages (if any) specified in this Agreement.

~~C. *Bonus:* Contractor and Owner further recognize the Owner will realize financial and other benefits if the Work is completed prior to the time specified for Substantial Completion. Accordingly, Owner and Contractor agree that as a bonus for early completion, Owner shall pay Contractor $**[number]** for each day prior to the time specified above for Substantial Completion (as duly adjusted pursuant to the Contract) that the Work is substantially complete. The maximum value of the bonus will be limited to $**[number]**.~~

4.06 *Special Damages*

A. Contractor shall reimburse Owner (1) for any fines or penalties imposed on Owner as a direct result of the Contractor's failure to attain Substantial Completion according to the Contract Times, and (2) for the actual costs reasonably incurred by Owner for engineering, construction observation, inspection, and administrative services needed after the time specified in Paragraph 4.02 for Substantial Completion (as duly adjusted pursuant to the Contract), until the Work is substantially complete.

B. After Contractor achieves Substantial Completion, if Contractor shall neglect, refuse, or fail to complete the remaining Work within the Contract Times, Contractor shall reimburse Owner for the actual costs reasonably incurred by Owner for engineering, construction observation, inspection, and administrative services needed after the time specified in Paragraph 4.02 for Work to be completed and ready for final payment (as duly adjusted pursuant to the Contract), until the Work is completed and ready for final payment.

C. The special damages imposed in this paragraph are supplemental to any liquidated damages for delayed completion established in this Agreement.

ARTICLE 5—CONTRACT PRICE

5.01 Owner shall pay Contractor for completion of the Work in accordance with the Contract Documents, the amounts that follow, subject to adjustment under the Contract:

A. ~~For all Work other than Unit Price Work, a lump sum of $**[number]**.~~

~~All specific cash allowances are included in the above price in accordance with Paragraph 13.02 of the General Conditions.~~

B. For all Unit Price Work, an amount equal to the sum of the extended prices (established for each separately identified item of Unit Price Work by multiplying the unit price times the actual quantity of that item).

Unit Price Work					
Item No.	**Description**	**Unit**	**Estimated Quantity**	**Unit Price**	**Extended Price**

Copyright© 2018 National Society of Professional Engineers, American Council of Engineering Companies, and American Society of Civil Engineers. All rights reserved.

Unit Price Work					
Item No.	**Description**	**Unit**	**Estimated Quantity**	**Unit Price**	**Extended Price**
				$	$
				$	$
				$	$
				$	$
				$	$
Total of all Extended Prices for Unit Price Work (subject to final adjustment based on actual quantities)					$

The extended prices for Unit Price Work set forth as of the Effective Date of the Contract are based on estimated quantities. As provided in Paragraph 13.03 of the General Conditions, estimated quantities are not guaranteed, and determinations of actual quantities and classifications are to be made by Engineer.

~~C. Total of Lump Sum Amount and Unit Price Work (subject to final Unit Price adjustment) $**[number]**.~~

~~D. For all Work, at the prices stated in Contractor's Bid, attached hereto as an exhibit.~~

ARTICLE 6—PAYMENT PROCEDURES

6.01 *Submittal and Processing of Payments*

A. Contractor shall submit Applications for Payment in accordance with Article 15 of the General Conditions. Applications for Payment will be processed by Engineer as provided in the General Conditions.

6.02 *Progress Payments; Retainage*

A. Owner shall make progress payments on the basis of Contractor's Applications for Payment on or about the _____day of each month during performance of the Work as provided in Paragraph 6.02.A.1 below, provided that such Applications for Payment have been submitted in a timely manner and otherwise meet the requirements of the Contract. All such payments will be measured by the Schedule of Values established as provided in the General Conditions (and in the case of Unit Price Work based on the number of units completed) or, in the event there is no Schedule of Values, as provided elsewhere in the Contract.

1. Prior to Substantial Completion, progress payments will be made in an amount equal to the percentage indicated below but, in each case, less the aggregate of payments previously made and less such amounts as Owner may withhold, including but not limited to liquidated damages, in accordance with the Contract.

a. **90** percent of the value of the Work completed (with the balance being retainage).

1) If 50 percent or more of the Work has been completed, as determined by Engineer, and if the character and progress of the Work have been satisfactory to Owner and Engineer, then as long as the character and progress of the Work

Copyright© 2018 National Society of Professional Engineers, American Council of Engineering Companies, and American Society of Civil Engineers. All rights reserved.

remain satisfactory to Owner and Engineer, there will be no additional retainage; and

b. **0** percent of cost of materials and equipment not incorporated in the Work (with the balance being retainage).

B. Upon Substantial Completion, Owner shall pay an amount sufficient to increase total payments to Contractor to **98** percent of the Work completed, less such amounts set off by Owner pursuant to Paragraph 15.01.E of the General Conditions, and less **100** percent of Engineer's estimate of the value of Work to be completed or corrected as shown on the punch list of items to be completed or corrected prior to final payment.

6.03 *Final Payment*

A. Upon final completion and acceptance of the Work, Owner shall pay the remainder of the Contract Price in accordance with Paragraph 15.06 of the General Conditions.

6.04 *Consent of Surety*

A. Owner will not make final payment, or return or release retainage at Substantial Completion or any other time, unless Contractor submits written consent of the surety to such payment, return, or release.

6.05 *Interest*

A. All amounts not paid when due will bear interest at the rate of **0** percent per annum.

ARTICLE 7—CONTRACT DOCUMENTS

7.01 *Contents*

A. The Contract Documents consist of all of the following:

1. This Agreement.
2. Bonds:
   a. Performance bond (together with power of attorney).
   b. Payment bond (together with power of attorney).
3. General Conditions.
4. Supplementary Conditions.
5. Specifications as listed in the table of contents of the project manual.
6. Drawings (not attached but incorporated by reference) consisting of 11 sheets with each sheet bearing the following general title: Contract 2 – Westwood Sanitary Sewer Replacement.
7. Addenda (numbers **[number]** to **[number]**, inclusive).
8. Exhibits to this Agreement (enumerated as follows):
   a. **Contractor's Bid (pages _ to __, inclusive)**
   b. Insurance Specifications (pages 1 to 12, inclusive).

Copyright© 2018 National Society of Professional Engineers, American Council of Engineering Companies, and American Society of Civil Engineers. All rights reserved.

c. The 2012 Standard Specifications for Construction adopted by the Michigan Department of Transportation are hereby incorporated into these contract documents.

d. Appendix A – SRF and DWRF Standard Contract Language

9. The following which may be delivered or issued on or after the Effective Date of the Contract and are not attached hereto:

a. Notice to Proceed.

b. Work Change Directives.

c. Change Orders.

d. Field Orders.

e. Warranty Bond, if any.

B. The Contract Documents listed in Paragraph 7.01.A are attached to this Agreement (except as expressly noted otherwise above).

C. There are no Contract Documents other than those listed above in this Article 7.

D. The Contract Documents may only be amended, modified, or supplemented as provided in the Contract.

ARTICLE 8—REPRESENTATIONS, CERTIFICATIONS, AND STIPULATIONS

8.01 *Contractor's Representations*

A. In order to induce Owner to enter into this Contract, Contractor makes the following representations:

1. Contractor has examined and carefully studied the Contract Documents, including Addenda.

2. Contractor has visited the Site, conducted a thorough visual examination of the Site and adjacent areas, and become familiar with the general, local, and Site conditions that may affect cost, progress, and performance of the Work.

3. Contractor is familiar with all Laws and Regulations that may affect cost, progress, and performance of the Work.

4. Contractor has carefully studied the reports of explorations and tests of subsurface conditions at or adjacent to the Site and the drawings of physical conditions relating to existing surface or subsurface structures at the Site that have been identified in the Supplementary Conditions, with respect to the Technical Data in such reports and drawings.

5. Contractor has carefully studied the reports and drawings relating to Hazardous Environmental Conditions, if any, at or adjacent to the Site that have been identified in the Supplementary Conditions, with respect to Technical Data in such reports and drawings.

6. Contractor has considered the information known to Contractor itself; information commonly known to contractors doing business in the locality of the Site; information

Copyright© 2018 National Society of Professional Engineers, American Council of Engineering Companies, and American Society of Civil Engineers. All rights reserved.

and observations obtained from visits to the Site; the Contract Documents; and the Technical Data identified in the Supplementary Conditions or by definition, with respect to the effect of such information, observations, and Technical Data on (a) the cost, progress, and performance of the Work; (b) the means, methods, techniques, sequences, and procedures of construction to be employed by Contractor; and (c) Contractor's safety precautions and programs.

7. Based on the information and observations referred to in the preceding paragraph, Contractor agrees that no further examinations, investigations, explorations, tests, studies, or data are necessary for the performance of the Work at the Contract Price, within the Contract Times, and in accordance with the other terms and conditions of the Contract.

8. Contractor is aware of the general nature of work to be performed by Owner and others at the Site that relates to the Work as indicated in the Contract Documents.

9. Contractor has given Engineer written notice of all conflicts, errors, ambiguities, or discrepancies that Contractor has discovered in the Contract Documents, and of discrepancies between Site conditions and the Contract Documents, and the written resolution thereof by Engineer is acceptable to Contractor.

10. The Contract Documents are generally sufficient to indicate and convey understanding of all terms and conditions for performance and furnishing of the Work.

11. Contractor's entry into this Contract constitutes an incontrovertible representation by Contractor that without exception all prices in the Agreement are premised upon performing and furnishing the Work required by the Contract Documents.

8.02 *Contractor's Certifications*

A. Contractor certifies that it has not engaged in corrupt, fraudulent, collusive, or coercive practices in competing for or in executing the Contract. For the purposes of this Paragraph 8.02:

1. "corrupt practice" means the offering, giving, receiving, or soliciting of anything of value likely to influence the action of a public official in the bidding process or in the Contract execution;

2. "fraudulent practice" means an intentional misrepresentation of facts made (a) to influence the bidding process or the execution of the Contract to the detriment of Owner, (b) to establish Bid or Contract prices at artificial non-competitive levels, or (c) to deprive Owner of the benefits of free and open competition;

3. "collusive practice" means a scheme or arrangement between two or more Bidders, with or without the knowledge of Owner, a purpose of which is to establish Bid prices at artificial, non-competitive levels; and

4. "coercive practice" means harming or threatening to harm, directly or indirectly, persons or their property to influence their participation in the bidding process or affect the execution of the Contract.

8.03 *Standard General Conditions*

A. Owner stipulates that if the General Conditions that are made a part of this Contract are EJCDC® C-700, Standard General Conditions for the Construction Contract (2018), published

Copyright© 2018 National Society of Professional Engineers, American Council of Engineering Companies, and American Society of Civil Engineers. All rights reserved.

by the Engineers Joint Contract Documents Committee, and if Owner is the party that has furnished said General Conditions, then Owner has plainly shown all modifications to the standard wording of such published document to the Contractor, through a process such as highlighting or "track changes" (redline/strikeout), or in the Supplementary Conditions.

Copyright© 2018 National Society of Professional Engineers, American Council of Engineering Companies, and American Society of Civil Engineers. All rights reserved.

IN WITNESS WHEREOF, Owner and Contractor have signed this Agreement.

This Agreement will be effective on _____ (which is the Effective Date of the Contract).

Owner:

City of Muskegon
(typed or printed name of organization)

By: _____
(individual's signature)

Date: _____
(date signed)

Name: _____
(typed or printed)

Title: _____
(typed or printed)

Attest: _____
(individual's signature)

Title: _____
(typed or printed)

Address for giving notices:

933 Terrace Street

Muskegon, MI 49443

Designated Representative:

Name: _____
(typed or printed)

Title: _____
(typed or printed)

Address:

Phone: _____

Email: _____

*(If **[Type of Entity]** is a corporation, attach evidence of authority to sign. If **[Type of Entity]** is a public body, attach evidence of authority to sign and resolution or other documents authorizing execution of this Agreement.)*

Contractor:

_____
(typed or printed name of organization)

By: _____
(individual's signature)

Date: _____
(date signed)

Name: _____
(typed or printed)

Title: _____
(typed or printed)

*(If **[Type of Entity]** is a corporation, a partnership, or a joint venture, attach evidence of authority to sign.)*

Attest: _____
(individual's signature)

Title: _____
(typed or printed)

Address for giving notices:

Designated Representative:

Name: _____
(typed or printed)

Title: _____
(typed or printed)

Address:

Phone: _____

Email: _____

License No.: _____
(where applicable)

State: _____

EJCDC® C-520, Agreement between Owner and Contractor for Construction Contract (Stipulated Price).
Copyright© 2018 National Society of Professional Engineers, American Council of Engineering Companies, and American Society of Civil Engineers. All rights reserved.

[Intentionally left blank]

PERFORMANCE BOND

Contractor	**Surety**
Name: Address *(principal place of business)*:	Name: Address *(principal place of business)*:
Owner Name: City of Muskegon Mailing address *(principal place of business)*: 933 Terrace Street Muskegon, MI 49440	**Contract** Description *(name and location)*: Wastewater System Improvements Westwood Sanitary Sewer Replacement, Contract No. 2 Contract Price: Effective Date of Contract:

Bond

Bond Amount:

Date of Bond:

(Date of Bond cannot be earlier than Effective Date of Contract)

Modifications to this Bond form:

☐ None ☐ See Paragraph 16

Surety and Contractor, intending to be legally bound hereby, subject to the terms set forth in this Performance Bond, do each cause this Performance Bond to be duly executed by an authorized officer, agent, or representative.

Contractor as Principal	Surety
_____ *(Full formal name of Contractor)*	_____ *(Full formal name of Surety) (corporate seal)*
By: _____ *(Signature)*	By: _____ *(Signature)(Attach Power of Attorney)*
Name: _____ *(Printed or typed)*	Name: _____ *(Printed or typed)*
Title: _____	Title: _____
Attest: _____ *(Signature)*	Attest: _____ *(Signature)*
Name: _____ *(Printed or typed)*	Name: _____ *(Printed or typed)*
Title: _____	Title: _____

Notes: (1) Provide supplemental execution by any additional parties, such as joint venturers. (2) Any singular reference to Contractor, Surety, Owner, or other party is considered plural where applicable.

Copyright© 2018 National Society of Professional Engineers, American Council of Engineering Companies, and American Society of Civil Engineers. All rights reserved.

1. The Contractor and Surety, jointly and severally, bind themselves, their heirs, executors, administrators, successors, and assigns to the Owner for the performance of the Construction Contract, which is incorporated herein by reference.

2. If the Contractor performs the Construction Contract, the Surety and the Contractor shall have no obligation under this Bond, except when applicable to participate in a conference as provided in Paragraph 3.

3. If there is no Owner Default under the Construction Contract, the Surety's obligation under this Bond will arise after:

   3.1. The Owner first provides notice to the Contractor and the Surety that the Owner is considering declaring a Contractor Default. Such notice may indicate whether the Owner is requesting a conference among the Owner, Contractor, and Surety to discuss the Contractor's performance. If the Owner does not request a conference, the Surety may, within five (5) business days after receipt of the Owner's notice, request such a conference. If the Surety timely requests a conference, the Owner shall attend. Unless the Owner agrees otherwise, any conference requested under this Paragraph 3.1 will be held within ten (10) business days of the Surety's receipt of the Owner's notice. If the Owner, the Contractor, and the Surety agree, the Contractor shall be allowed a reasonable time to perform the Construction Contract, but such an agreement does not waive the Owner's right, if any, subsequently to declare a Contractor Default;

   3.2. The Owner declares a Contractor Default, terminates the Construction Contract and notifies the Surety; and

   3.3. The Owner has agreed to pay the Balance of the Contract Price in accordance with the terms of the Construction Contract to the Surety or to a contractor selected to perform the Construction Contract.

4. Failure on the part of the Owner to comply with the notice requirement in Paragraph 3.1 does not constitute a failure to comply with a condition precedent to the Surety's obligations, or release the Surety from its obligations, except to the extent the Surety demonstrates actual prejudice.

5. When the Owner has satisfied the conditions of Paragraph 3, the Surety shall promptly and at the Surety's expense take one of the following actions:

   5.1. Arrange for the Contractor, with the consent of the Owner, to perform and complete the Construction Contract;

   5.2. Undertake to perform and complete the Construction Contract itself, through its agents or independent contractors;

   5.3. Obtain bids or negotiated proposals from qualified contractors acceptable to the Owner for a contract for performance and completion of the Construction Contract, arrange for a contract to be prepared for execution by the Owner and a contractor selected with the Owners concurrence, to be secured with performance and payment bonds executed by a qualified surety equivalent to the bonds issued on the Construction Contract, and pay to the Owner the amount of damages as described in Paragraph 7 in excess of the Balance of the Contract Price incurred by the Owner as a result of the Contractor Default; or

   5.4. Waive its right to perform and complete, arrange for completion, or obtain a new contractor, and with reasonable promptness under the circumstances:

Copyright© 2018 National Society of Professional Engineers, American Council of Engineering Companies, and American Society of Civil Engineers. All rights reserved.

5.4.1 After investigation, determine the amount for which it may be liable to the Owner and, as soon as practicable after the amount is determined, make payment to the Owner; or

5.4.2 Deny liability in whole or in part and notify the Owner, citing the reasons for denial.

6. If the Surety does not proceed as provided in Paragraph 5 with reasonable promptness, the Surety shall be deemed to be in default on this Bond seven days after receipt of an additional written notice from the Owner to the Surety demanding that the Surety perform its obligations under this Bond, and the Owner shall be entitled to enforce any remedy available to the Owner. If the Surety proceeds as provided in Paragraph 5.4, and the Owner refuses the payment, or the Surety has denied liability, in whole or in part, without further notice, the Owner shall be entitled to enforce any remedy available to the Owner.

7. If the Surety elects to act under Paragraph 5.1, 5.2, or 5.3, then the responsibilities of the Surety to the Owner will not be greater than those of the Contractor under the Construction Contract, and the responsibilities of the Owner to the Surety will not be greater than those of the Owner under the Construction Contract. Subject to the commitment by the Owner to pay the Balance of the Contract Price, the Surety is obligated, without duplication for:

   7.1. the responsibilities of the Contractor for correction of defective work and completion of the Construction Contract;

   7.2. additional legal, design professional, and delay costs resulting from the Contractor's Default, and resulting from the actions or failure to act of the Surety under Paragraph 5; and

   7.3. liquidated damages, or if no liquidated damages are specified in the Construction Contract, actual damages caused by delayed performance or non-performance of the Contractor.

8. If the Surety elects to act under Paragraph 5.1, 5.3, or 5.4, the Surety's liability is limited to the amount of this Bond.

9. The Surety shall not be liable to the Owner or others for obligations of the Contractor that are unrelated to the Construction Contract, and the Balance of the Contract Price will not be reduced or set off on account of any such unrelated obligations. No right of action will accrue on this Bond to any person or entity other than the Owner or its heirs, executors, administrators, successors, and assigns.

10. The Surety hereby waives notice of any change, including changes of time, to the Construction Contract or to related subcontracts, purchase orders, and other obligations.

11. Any proceeding, legal or equitable, under this Bond must be instituted in any court of competent jurisdiction in the location in which the work or part of the work is located and must be instituted within two years after a declaration of Contractor Default or within two years after the Contractor ceased working or within two years after the Surety refuses or fails to perform its obligations under this Bond, whichever occurs first. If the provisions of this paragraph are void or prohibited by law, the minimum periods of limitations available to sureties as a defense in the jurisdiction of the suit will be applicable.

12. Notice to the Surety, the Owner, or the Contractor must be mailed or delivered to the address shown on the page on which their signature appears.

13. When this Bond has been furnished to comply with a statutory or other legal requirement in the location where the construction was to be performed, any provision in this Bond conflicting with

Copyright© 2018 National Society of Professional Engineers, American Council of Engineering Companies, and American Society of Civil Engineers. All rights reserved.

said statutory or legal requirement will be deemed deleted therefrom and provisions conforming to such statutory or other legal requirement will be deemed incorporated herein. When so furnished, the intent is that this Bond will be construed as a statutory bond and not as a common law bond.

14. Definitions

    14.1. *Balance of the Contract Price*—The total amount payable by the Owner to the Contractor under the Construction Contract after all proper adjustments have been made including allowance for the Contractor for any amounts received or to be received by the Owner in settlement of insurance or other claims for damages to which the Contractor is entitled, reduced by all valid and proper payments made to or on behalf of the Contractor under the Construction Contract.

    14.2. *Construction Contract*—The agreement between the Owner and Contractor identified on the cover page, including all Contract Documents and changes made to the agreement and the Contract Documents.

    14.3. *Contractor Default*—Failure of the Contractor, which has not been remedied or waived, to perform or otherwise to comply with a material term of the Construction Contract.

    14.4. *Owner Default*—Failure of the Owner, which has not been remedied or waived, to pay the Contractor as required under the Construction Contract or to perform and complete or comply with the other material terms of the Construction Contract.

    14.5. *Contract Documents*—All the documents that comprise the agreement between the Owner and Contractor.

15. If this Bond is issued for an agreement between a contractor and subcontractor, the term Contractor in this Bond will be deemed to be Subcontractor and the term Owner will be deemed to be Contractor.

16. Modifications to this Bond are as follows: **None**

Copyright© 2018 National Society of Professional Engineers, American Council of Engineering Companies, and American Society of Civil Engineers. All rights reserved.

PAYMENT BOND

Contractor	**Surety**
Name: Address *(principal place of business)*:	Name: Address *(principal place of business)*:
Owner Name: City of Muskegon Mailing address *(principal place of business)*: 933 Terrace Street Muskegon, MI 49440	**Contract** Description *(name and location)*: Wastewater System Improvements Westwood Sewer Replacement, Contract No. 2 Contract Price: Effective Date of Contract:

Bond

Bond Amount:

Date of Bond:

(Date of Bond cannot be earlier than Effective Date of Contract)

Modifications to this Bond form:

☐ None ☐ See Paragraph 18

Surety and Contractor, intending to be legally bound hereby, subject to the terms set forth in this Payment Bond, do each cause this Payment Bond to be duly executed by an authorized officer, agent, or representative.

Contractor as Principal	Surety
_____ *(Full formal name of Contractor)*	_____ *(Full formal name of Surety) (corporate seal)*
By: _____ *(Signature)*	By: _____ *(Signature)(Attach Power of Attorney)*
Name: _____ *(Printed or typed)*	Name: _____ *(Printed or typed)*
Title: _____	Title: _____
Attest: _____ *(Signature)*	Attest: _____ *(Signature)*
Name: _____ *(Printed or typed)*	Name: _____ *(Printed or typed)*
Title: _____	Title: _____

Notes: (1) Provide supplemental execution by any additional parties, such as joint venturers. (2) Any singular reference to Contractor, Surety, Owner, or other party is considered plural where applicable.

Copyright© 2018 National Society of Professional Engineers, American Council of Engineering Companies, and American Society of Civil Engineers. All rights reserved.

1. The Contractor and Surety, jointly and severally, bind themselves, their heirs, executors, administrators, successors, and assigns to the Owner to pay for labor, materials, and equipment furnished for use in the performance of the Construction Contract, which is incorporated herein by reference, subject to the following terms.

2. If the Contractor promptly makes payment of all sums due to Claimants, and defends, indemnifies, and holds harmless the Owner from claims, demands, liens, or suits by any person or entity seeking payment for labor, materials, or equipment furnished for use in the performance of the Construction Contract, then the Surety and the Contractor shall have no obligation under this Bond.

3. If there is no Owner Default under the Construction Contract, the Surety's obligation to the Owner under this Bond will arise after the Owner has promptly notified the Contractor and the Surety (at the address described in Paragraph 13) of claims, demands, liens, or suits against the Owner or the Owner's property by any person or entity seeking payment for labor, materials, or equipment furnished for use in the performance of the Construction Contract, and tendered defense of such claims, demands, liens, or suits to the Contractor and the Surety.

4. When the Owner has satisfied the conditions in Paragraph 3, the Surety shall promptly and at the Surety's expense defend, indemnify, and hold harmless the Owner against a duly tendered claim, demand, lien, or suit.

5. The Surety's obligations to a Claimant under this Bond will arise after the following:

   5.1. Claimants who do not have a direct contract with the Contractor

      5.1.1. have furnished a written notice of non-payment to the Contractor, stating with substantial accuracy the amount claimed and the name of the party to whom the materials were, or equipment was, furnished or supplied or for whom the labor was done or performed, within ninety (90) days after having last performed labor or last furnished materials or equipment included in the Claim; and

      5.1.2. have sent a Claim to the Surety (at the address described in Paragraph 13).

   5.2. Claimants who are employed by or have a direct contract with the Contractor have sent a Claim to the Surety (at the address described in Paragraph 13).

6. If a notice of non-payment required by Paragraph 5.1.1 is given by the Owner to the Contractor, that is sufficient to satisfy a Claimant's obligation to furnish a written notice of non-payment under Paragraph 5.1.1.

7. When a Claimant has satisfied the conditions of Paragraph 5.1 or 5.2, whichever is applicable, the Surety shall promptly and at the Surety's expense take the following actions:

   7.1. Send an answer to the Claimant, with a copy to the Owner, within sixty (60) days after receipt of the Claim, stating the amounts that are undisputed and the basis for challenging any amounts that are disputed; and

   7.2. Pay or arrange for payment of any undisputed amounts.

   7.3. The Surety's failure to discharge its obligations under Paragraph 7.1 or 7.2 will not be deemed to constitute a waiver of defenses the Surety or Contractor may have or acquire as to a Claim, except as to undisputed amounts for which the Surety and Claimant have reached agreement. If, however, the Surety fails to discharge its obligations under Paragraph 7.1 or 7.2, the Surety shall indemnify the Claimant for the reasonable attorney's fees the Claimant incurs thereafter to recover any sums found to be due and owing to the Claimant.

Copyright© 2018 National Society of Professional Engineers, American Council of Engineering Companies, and American Society of Civil Engineers. All rights reserved.

8. The Surety's total obligation will not exceed the amount of this Bond, plus the amount of reasonable attorney's fees provided under Paragraph 7.3, and the amount of this Bond will be credited for any payments made in good faith by the Surety.

9. Amounts owed by the Owner to the Contractor under the Construction Contract will be used for the performance of the Construction Contract and to satisfy claims, if any, under any construction performance bond. By the Contractor furnishing and the Owner accepting this Bond, they agree that all funds earned by the Contractor in the performance of the Construction Contract are dedicated to satisfying obligations of the Contractor and Surety under this Bond, subject to the Owner's priority to use the funds for the completion of the work.

10. The Surety shall not be liable to the Owner, Claimants, or others for obligations of the Contractor that are unrelated to the Construction Contract. The Owner shall not be liable for the payment of any costs or expenses of any Claimant under this Bond, and shall have under this Bond no obligation to make payments to or give notice on behalf of Claimants, or otherwise have any obligations to Claimants under this Bond.

11. The Surety hereby waives notice of any change, including changes of time, to the Construction Contract or to related subcontracts, purchase orders, and other obligations.

12. No suit or action will be commenced by a Claimant under this Bond other than in a court of competent jurisdiction in the state in which the project that is the subject of the Construction Contract is located or after the expiration of one year from the date (1) on which the Claimant sent a Claim to the Surety pursuant to Paragraph 5.1.2 or 5.2, or (2) on which the last labor or service was performed by anyone or the last materials or equipment were furnished by anyone under the Construction Contract, whichever of (1) or (2) first occurs. If the provisions of this paragraph are void or prohibited by law, the minimum period of limitation available to sureties as a defense in the jurisdiction of the suit will be applicable.

13. Notice and Claims to the Surety, the Owner, or the Contractor must be mailed or delivered to the address shown on the page on which their signature appears. Actual receipt of notice or Claims, however accomplished, will be sufficient compliance as of the date received.

14. When this Bond has been furnished to comply with a statutory or other legal requirement in the location where the construction was to be performed, any provision in this Bond conflicting with said statutory or legal requirement will be deemed deleted here from and provisions conforming to such statutory or other legal requirement will be deemed incorporated herein. When so furnished, the intent is that this Bond will be construed as a statutory bond and not as a common law bond.

15. Upon requests by any person or entity appearing to be a potential beneficiary of this Bond, the Contractor and Owner shall promptly furnish a copy of this Bond or shall permit a copy to be made.

16. Definitions

    16.1. *Claim*—A written statement by the Claimant including at a minimum:

        16.1.1. The name of the Claimant;

        16.1.2. The name of the person for whom the labor was done, or materials or equipment furnished;

        16.1.3. A copy of the agreement or purchase order pursuant to which labor, materials, or equipment was furnished for use in the performance of the Construction Contract;

        16.1.4. A brief description of the labor, materials, or equipment furnished;

Copyright© 2018 National Society of Professional Engineers, American Council of Engineering Companies, and American Society of Civil Engineers. All rights reserved.

16.1.5. The date on which the Claimant last performed labor or last furnished materials or equipment for use in the performance of the Construction Contract;

16.1.6. The total amount earned by the Claimant for labor, materials, or equipment furnished as of the date of the Claim;

16.1.7. The total amount of previous payments received by the Claimant; and

16.1.8. The total amount due and unpaid to the Claimant for labor, materials, or equipment furnished as of the date of the Claim.

16.2. *Claimant*—An individual or entity having a direct contract with the Contractor or with a subcontractor of the Contractor to furnish labor, materials, or equipment for use in the performance of the Construction Contract. The term Claimant also includes any individual or entity that has rightfully asserted a claim under an applicable mechanic's lien or similar statute against the real property upon which the Project is located. The intent of this Bond is to include without limitation in the terms of "labor, materials, or equipment" that part of the water, gas, power, light, heat, oil, gasoline, telephone service, or rental equipment used in the Construction Contract, architectural and engineering services required for performance of the work of the Contractor and the Contractor's subcontractors, and all other items for which a mechanic's lien may be asserted in the jurisdiction where the labor, materials, or equipment were furnished.

16.3. *Construction Contract*—The agreement between the Owner and Contractor identified on the cover page, including all Contract Documents and all changes made to the agreement and the Contract Documents.

16.4. *Owner Default*—Failure of the Owner, which has not been remedied or waived, to pay the Contractor as required under the Construction Contract or to perform and complete or comply with the other material terms of the Construction Contract.

16.5. *Contract Documents*—All the documents that comprise the agreement between the Owner and Contractor.

17. If this Bond is issued for an agreement between a contractor and subcontractor, the term Contractor in this Bond will be deemed to be Subcontractor and the term Owner will be deemed to be Contractor.

18. Modifications to this Bond are as follows: **None**

Copyright© 2018 National Society of Professional Engineers, American Council of Engineering Companies, and American Society of Civil Engineers. All rights reserved.

This document has important legal consequences; consultation with an attorney is encouraged with respect to its use or modification. This document should be adapted to the particular circumstances of the contemplated Project and the controlling Laws and Regulations.

STANDARD GENERAL CONDITIONS OF THE CONSTRUCTION CONTRACT

Prepared By

EJCDC®
ENGINEERS JOINT CONTRACT DOCUMENTS COMMITTEE

ACEC
AMERICAN COUNCIL OF ENGINEERING COMPANIES

ASCE
AMERICAN SOCIETY OF CIVIL ENGINEERS

NSPE®
NATIONAL SOCIETY OF PROFESSIONAL ENGINEERS

Endorsed By

CSI®
Building Knowledge
Improving Project Delivery

NUCA
We Dig America

EJCDC® C-700, Standard General Conditions of the Construction Contract.
Copyright© 2018 National Society of Professional Engineers, American Council of Engineering Companies, and American Society of Civil Engineers. All rights reserved.

Copyright© 2018

National Society of Professional Engineers

1420 King Street, Alexandria, VA 22314-2794

(703) 684-2882

www.nspe.org

American Council of Engineering Companies

1015 15th Street N.W., Washington, DC 20005

(202) 347-7474

www.acec.org

American Society of Civil Engineers

1801 Alexander Bell Drive, Reston, VA 20191-4400

(800) 548-2723

www.asce.org

The copyright for this EJCDC document is owned jointly by the three sponsoring organizations listed above. The National Society of Professional Engineers is the Copyright Administrator for the EJCDC documents; please direct all inquiries regarding EJCDC copyrights to NSPE.

NOTE: EJCDC publications may be purchased at www.ejcdc.org, or from any of the sponsoring organizations above.

GUIDELINES FOR USE OF EJCDC® C-700, STANDARD GENERAL CONDITIONS OF THE CONSTRUCTION CONTRACT

1.0 PURPOSE AND INTENDED USE OF THE DOCUMENT

EJCDC® C-700, Standard General Conditions of the Construction Contract (2018), is the foundation document for the EJCDC Construction Series. The General Conditions define the basic rights, responsibilities, risk allocations, and contractual relationship of the Owner and Contractor, and establish how the Contract is to be administered.

2.0 OTHER DOCUMENTS

EJCDC documents are intended to be used as a system and changes in one EJCDC document may require a corresponding change in other documents. Other EJCDC documents may also serve as a reference to provide insight or guidance for the preparation of this document.

These General Conditions have been prepared for use with either EJCDC® C-520, Agreement Between Owner and Contractor for Construction Contract (Stipulated Price), or EJCDC® C-525, Agreement Between Owner and Contractor for Construction Contract (Cost-Plus-Fee) (2018 Editions). The provisions of the General Conditions and the Agreement are interrelated, and a change in one may necessitate a change in the other.

To prepare supplementary conditions that are coordinated with the General Conditions, use EJCDC® C-800, Supplementary Conditions of the Construction Contract (2018).

The full EJCDC Construction series of documents is discussed in the EJCDC® C-001, Commentary on the 2018 EJCDC Construction Documents (2018).

3.0 ORGANIZATION OF INFORMATION

All parties involved in a construction project benefit significantly from a standardized approach in the location of subject matter throughout the documents. Experience confirms the danger of addressing the same subject matter in more than one location; doing so frequently leads to confusion and unanticipated legal consequences. Careful attention should be given to the guidance provided in EJCDC® N-122/AIA® A521, Uniform Location of Subject Matter (2012 Edition) when preparing documents. EJCDC® N-122/AIA® A521 is available at no charge from the EJCDC website, www.ejcdc.org, and from the websites of EJCDC's sponsoring organizations.

If CSI MasterFormat™ is used for organizing the Project Manual, consult CSI MasterFormat™ for the appropriate document number (e.g., under 00 11 00, Advertisements and Invitations), and accordingly number the document and its pages.

4.0 EDITING THIS DOCUMENT

Remove these Guidelines for Use. Some users may also prefer to remove the two cover pages.

Although it is permissible to revise the Standard EJCDC Text of C-700 (the content beginning at page 1 and continuing to the end), it is common practice to leave the Standard EJCDC Text of C-700 intact and unaltered, with modifications and supplementation of C-700's provisions set forth in EJCDC® C-800, Supplementary Conditions of the Construction Contract (2018). If the Standard Text itself is revised, the

Copyright© 2018 National Society of Professional Engineers, American Council of Engineering Companies, and American Society of Civil Engineers. All rights reserved.

user must comply with the terms of the License Agreement, Paragraph 4.0, Document-Specific Provisions, concerning the tracking or highlighting of revisions. The following is a summary of the relevant License Agreement provisions:

1. The term "Standard EJCDC Text" for C-700 refers to all text prepared by EJCDC in the main body of the document. Document covers, logos, footers, instructions, or copyright notices are not Standard EJCDC Text for this purpose.
2. During the drafting or negotiating process for C-700, it is important that the two contracting parties are both aware of any changes that have been made to the Standard EJCDC Text. Thus, if a draft or version of C-700 purports to be or appears to be an EJCDC document, the user must plainly show all changes to the Standard EJCDC Text, using "Track Changes" (redline/strikeout), highlighting, or other means of clearly indicating additions and deletions.
3. If C-700 has been revised or altered and is subsequently presented to third parties (such as potential bidders, grant agencies, lenders, or sureties) as an EJCDC document, then the changes to the Standard EJCDC Text must be shown, or the third parties must receive access to a version that shows the changes.
4. Once the document is ready to be finalized (and if applicable executed by the contracting parties), it is no longer necessary to continue to show changes to the Standard EJCDC Text. The user may produce a final version of the document in a format in which all changes are accepted, and the document at that point does not need to include any "Track Changes," redline/strikeout, highlighting, or other indication of additions and deletions to the Standard EJCDC Text.

5.0 LICENSE AGREEMENT

This document is subject to the terms and conditions of the **License Agreement, 2018 EJCDC® Construction Series Documents**. A copy of the License Agreement was furnished at the time of purchase of this document, and is available for review at www.ejcdc.org and the websites of EJCDC's sponsoring organizations.

Copyright© 2018 National Society of Professional Engineers, American Council of Engineering Companies, and American Society of Civil Engineers. All rights reserved.

STANDARD GENERAL CONDITIONS OF THE CONSTRUCTION CONTRACT

TABLE OF CONTENTS

Page

Article 1—Definitions and Terminology 1

1.01 Defined Terms 1

1.02 Terminology 6

Article 2—Preliminary Matters 7

2.01 Delivery of Performance and Payment Bonds; Evidence of Insurance 7

2.02 Copies of Documents 7

2.03 Before Starting Construction 8

2.04 Preconstruction Conference; Designation of Authorized Representatives 8

2.05 Acceptance of Schedules 8

2.06 Electronic Transmittals 9

Article 3—Contract Documents: Intent, Requirements, Reuse 9

3.01 Intent 9

3.02 Reference Standards 10

3.03 Reporting and Resolving Discrepancies 10

3.04 Requirements of the Contract Documents 11

3.05 Reuse of Documents 11

Article 4—Commencement and Progress of the Work 12

4.01 Commencement of Contract Times; Notice to Proceed 12

4.02 Starting the Work 12

4.03 Reference Points 12

4.04 Progress Schedule 12

4.05 Delays in Contractor's Progress 12

Article 5—Site; Subsurface and Physical Conditions; Hazardous Environmental Conditions 14

5.01 Availability of Lands 14

5.02 Use of Site and Other Areas 14

5.03 Subsurface and Physical Conditions 15

5.04 Differing Subsurface or Physical Conditions 16

Copyright© 2018 National Society of Professional Engineers, American Council of Engineering Companies, and American Society of Civil Engineers. All rights reserved.

5.05 Underground Facilities 18
5.06 Hazardous Environmental Conditions at Site 19
Article 6—Bonds and Insurance 22
6.01 Performance, Payment, and Other Bonds 22
6.02 Insurance—General Provisions 22
6.03 Contractor's Insurance 24
6.04 Builder's Risk and Other Property Insurance 25
6.05 Property Losses; Subrogation 26
6.06 Receipt and Application of Property Insurance Proceeds 27
Article 7—Contractor's Responsibilities 27
7.01 Contractor's Means and Methods of Construction 27
7.02 Supervision and Superintendence 28
7.03 Labor; Working Hours 28
7.04 Services, Materials, and Equipment 28
7.05 "Or Equals" 29
7.06 Substitutes 30
7.07 Concerning Subcontractors and Suppliers 31
7.08 Patent Fees and Royalties 32
7.09 Permits 33
7.10 Taxes 33
7.11 Laws and Regulations 33
7.12 Record Documents 34
7.13 Safety and Protection 34
7.14 Hazard Communication Programs 35
7.15 Emergencies 35
7.16 Submittals 36
7.17 Contractor's General Warranty and Guarantee 38
7.18 Indemnification 39
7.19 Delegation of Professional Design Services 40
Article 8—Other Work at the Site 41
8.01 Other Work 41
8.02 Coordination 41
8.03 Legal Relationships 42

Copyright© 2018 National Society of Professional Engineers, American Council of Engineering Companies, and American Society of Civil Engineers. All rights reserved.

Article 9—Owner's Responsibilities 43
9.01 Communications to Contractor 43
9.02 Replacement of Engineer 43
9.03 Furnish Data 43
9.04 Pay When Due 43
9.05 Lands and Easements; Reports, Tests, and Drawings 43
9.06 Insurance 43
9.07 Change Orders 43
9.08 Inspections, Tests, and Approvals 44
9.09 Limitations on Owner's Responsibilities 44
9.10 Undisclosed Hazardous Environmental Condition 44
9.11 Evidence of Financial Arrangements 44
9.12 Safety Programs 44
Article 10—Engineer's Status During Construction 44
10.01 Owner's Representative 44
10.02 Visits to Site 44
10.03 Resident Project Representative 45
10.04 Engineer's Authority 45
10.05 Determinations for Unit Price Work 45
10.06 Decisions on Requirements of Contract Documents and Acceptability of Work 45
10.07 Limitations on Engineer's Authority and Responsibilities 45
10.08 Compliance with Safety Program 46
Article 11—Changes to the Contract 46
11.01 Amending and Supplementing the Contract 46
11.02 Change Orders 46
11.03 Work Change Directives 47
11.04 Field Orders 47
11.05 Owner-Authorized Changes in the Work 47
11.06 Unauthorized Changes in the Work 48
11.07 Change of Contract Price 48
11.08 Change of Contract Times 49
11.09 Change Proposals 49
11.10 Notification to Surety 51

Copyright© 2018 National Society of Professional Engineers, American Council of Engineering Companies, and American Society of Civil Engineers. All rights reserved.

Article 12—Claims 51
12.01 Claims 51
Article 13—Cost of the Work; Allowances; Unit Price Work 52
13.01 Cost of the Work 52
13.02 Allowances 56
13.03 Unit Price Work 56
Article 14—Tests and Inspections; Correction, Removal, or Acceptance of Defective Work 57
14.01 Access to Work 57
14.02 Tests, Inspections, and Approvals 57
14.03 Defective Work 58
14.04 Acceptance of Defective Work 58
14.05 Uncovering Work 59
14.06 Owner May Stop the Work 59
14.07 Owner May Correct Defective Work 59
Article 15—Payments to Contractor; Set-Offs; Completion; Correction Period 60
15.01 Progress Payments 60
15.02 Contractor's Warranty of Title 63
15.03 Substantial Completion 63
15.04 Partial Use or Occupancy 64
15.05 Final Inspection 65
15.06 Final Payment 65
15.07 Waiver of Claims 66
15.08 Correction Period 67
Article 16—Suspension of Work and Termination 68
16.01 Owner May Suspend Work 68
16.02 Owner May Terminate for Cause 68
16.03 Owner May Terminate for Convenience 69
16.04 Contractor May Stop Work or Terminate 69
Article 17—Final Resolution of Disputes 70
17.01 Methods and Procedures 70
Article 18—Miscellaneous 70
18.01 Giving Notice 70
18.02 Computation of Times 70

Copyright© 2018 National Society of Professional Engineers, American Council of Engineering Companies, and American Society of Civil Engineers. All rights reserved.

18.03 Cumulative Remedies 70
18.04 Limitation of Damages 71
18.05 No Waiver 71
18.06 Survival of Obligations 71
18.07 Controlling Law 71
18.08 Assignment of Contract 71
18.09 Successors and Assigns 71
18.10 Headings 71

Copyright© 2018 National Society of Professional Engineers, American Council of Engineering Companies, and American Society of Civil Engineers. All rights reserved.

STANDARD GENERAL CONDITIONS OF THE CONSTRUCTION CONTRACT

ARTICLE 1—DEFINITIONS AND TERMINOLOGY

1.01 *Defined Terms*

A. Wherever used in the Bidding Requirements or Contract Documents, a term printed with initial capital letters, including the term's singular and plural forms, will have the meaning indicated in the definitions below. In addition to terms specifically defined, terms with initial capital letters in the Contract Documents include references to identified articles and paragraphs, and the titles of other documents or forms.

1. *Addenda*—Written or graphic instruments issued prior to the opening of Bids which clarify, correct, or change the Bidding Requirements or the proposed Contract Documents.

2. *Agreement*—The written instrument, executed by Owner and Contractor, that sets forth the Contract Price and Contract Times, identifies the parties and the Engineer, and designates the specific items that are Contract Documents.

3. *Application for Payment*—The document prepared by Contractor, in a form acceptable to Engineer, to request progress or final payments, and which is to be accompanied by such supporting documentation as is required by the Contract Documents.

4. *Bid*—The offer of a Bidder submitted on the prescribed form setting forth the prices for the Work to be performed.

5. *Bidder*—An individual or entity that submits a Bid to Owner.

6. *Bidding Documents*—The Bidding Requirements, the proposed Contract Documents, and all Addenda.

7. *Bidding Requirements*—The Advertisement or invitation to bid, Instructions to Bidders, Bid Bond or other Bid security, if any, the Bid Form, and the Bid with any attachments.

8. *Change Order*—A document which is signed by Contractor and Owner and authorizes an addition, deletion, or revision in the Work or an adjustment in the Contract Price or the Contract Times, or other revision to the Contract, issued on or after the Effective Date of the Contract.

9. *Change Proposal*—A written request by Contractor, duly submitted in compliance with the procedural requirements set forth herein, seeking an adjustment in Contract Price or Contract Times; contesting an initial decision by Engineer concerning the requirements of the Contract Documents or the acceptability of Work under the Contract Documents; challenging a set-off against payments due; or seeking other relief with respect to the terms of the Contract.

10. *Claim*

a. A demand or assertion by Owner directly to Contractor, duly submitted in compliance with the procedural requirements set forth herein, seeking an adjustment of Contract Price or Contract Times; contesting an initial decision by

Copyright© 2018 National Society of Professional Engineers, American Council of Engineering Companies, and American Society of Civil Engineers. All rights reserved.

Engineer concerning the requirements of the Contract Documents or the acceptability of Work under the Contract Documents; contesting Engineer's decision regarding a Change Proposal; seeking resolution of a contractual issue that Engineer has declined to address; or seeking other relief with respect to the terms of the Contract.

b. A demand or assertion by Contractor directly to Owner, duly submitted in compliance with the procedural requirements set forth herein, contesting Engineer's decision regarding a Change Proposal, or seeking resolution of a contractual issue that Engineer has declined to address.

c. A demand or assertion by Owner or Contractor, duly submitted in compliance with the procedural requirements set forth herein, made pursuant to Paragraph 12.01.A.4, concerning disputes arising after Engineer has issued a recommendation of final payment.

d. A demand for money or services by a third party is not a Claim.

11. Constituent of Concern—Asbestos, petroleum, radioactive materials, polychlorinated biphenyls (PCBs), lead-based paint (as defined by the HUD/EPA standard), hazardous waste, and any substance, product, waste, or other material of any nature whatsoever that is or becomes listed, regulated, or addressed pursuant to Laws and Regulations regulating, relating to, or imposing liability or standards of conduct concerning, any hazardous, toxic, or dangerous waste, substance, or material.

12. *Contract*—The entire and integrated written contract between Owner and Contractor concerning the Work.

13. *Contract Documents*—Those items so designated in the Agreement, and which together comprise the Contract.

14. *Contract Price*—The money that Owner has agreed to pay Contractor for completion of the Work in accordance with the Contract Documents.

15. *Contract Times*—The number of days or the dates by which Contractor shall: (a) achieve Milestones, if any; (b) achieve Substantial Completion; and (c) complete the Work.

16. *Contractor*—The individual or entity with which Owner has contracted for performance of the Work.

17. *Cost of the Work*—See Paragraph 13.01 for definition.

18. *Drawings*—The part of the Contract that graphically shows the scope, extent, and character of the Work to be performed by Contractor.

19. *Effective Date of the Contract*—The date, indicated in the Agreement, on which the Contract becomes effective.

20. *Electronic Document*—Any Project-related correspondence, attachments to correspondence, data, documents, drawings, information, or graphics, including but not limited to Shop Drawings and other Submittals, that are in an electronic or digital format.

21. *Electronic Means*—Electronic mail (email), upload/download from a secure Project website, or other communications methods that allow: (a) the transmission or

Copyright© 2018 National Society of Professional Engineers, American Council of Engineering Companies, and American Society of Civil Engineers. All rights reserved.

communication of Electronic Documents; (b) the documentation of transmissions, including sending and receipt; (c) printing of the transmitted Electronic Document by the recipient; (d) the storage and archiving of the Electronic Document by sender and recipient; and (e) the use by recipient of the Electronic Document for purposes permitted by this Contract. Electronic Means does not include the use of text messaging, or of Facebook, Twitter, Instagram, or similar social media services for transmission of Electronic Documents.

22. *Engineer*—The individual or entity named as such in the Agreement.

23. *Field Order*—A written order issued by Engineer which requires minor changes in the Work but does not change the Contract Price or the Contract Times.

24. *Hazardous Environmental Condition*—The presence at the Site of Constituents of Concern in such quantities or circumstances that may present a danger to persons or property exposed thereto.

    a. The presence at the Site of materials that are necessary for the execution of the Work, or that are to be incorporated into the Work, and that are controlled and contained pursuant to industry practices, Laws and Regulations, and the requirements of the Contract, is not a Hazardous Environmental Condition.

    b. The presence of Constituents of Concern that are to be removed or remediated as part of the Work is not a Hazardous Environmental Condition.

    c. The presence of Constituents of Concern as part of the routine, anticipated, and obvious working conditions at the Site, is not a Hazardous Environmental Condition.

25. *Laws and Regulations; Laws or Regulations*—Any and all applicable laws, statutes, rules, regulations, ordinances, codes, and binding decrees, resolutions, and orders of any and all governmental bodies, agencies, authorities, and courts having jurisdiction.

26. *Liens*—Charges, security interests, or encumbrances upon Contract-related funds, real property, or personal property.

27. *Milestone*—A principal event in the performance of the Work that the Contract requires Contractor to achieve by an intermediate completion date, or by a time prior to Substantial Completion of all the Work.

28. *Notice of Award*—The written notice by Owner to a Bidder of Owner's acceptance of the Bid.

29. *Notice to Proceed*—A written notice by Owner to Contractor fixing the date on which the Contract Times will commence to run and on which Contractor shall start to perform the Work.

30. *Owner*—The individual or entity with which Contractor has contracted regarding the Work, and which has agreed to pay Contractor for the performance of the Work, pursuant to the terms of the Contract.

31. *Progress Schedule*—A schedule, prepared and maintained by Contractor, describing the sequence and duration of the activities comprising Contractor's plan to accomplish the Work within the Contract Times.

Copyright© 2018 National Society of Professional Engineers, American Council of Engineering Companies, and American Society of Civil Engineers. All rights reserved.

32. *Project*—The total undertaking to be accomplished for Owner by engineers, contractors, and others, including planning, study, design, construction, testing, commissioning, and start-up, and of which the Work to be performed under the Contract Documents is a part.

33. *Resident Project Representative*—The authorized representative of Engineer assigned to assist Engineer at the Site. As used herein, the term Resident Project Representative (RPR) includes any assistants or field staff of Resident Project Representative.

34. *Samples*—Physical examples of materials, equipment, or workmanship that are representative of some portion of the Work and that establish the standards by which such portion of the Work will be judged.

35. *Schedule of Submittals*—A schedule, prepared and maintained by Contractor, of required submittals and the time requirements for Engineer's review of the submittals.

36. *Schedule of Values*—A schedule, prepared and maintained by Contractor, allocating portions of the Contract Price to various portions of the Work and used as the basis for reviewing Contractor's Applications for Payment.

37. *Shop Drawings*—All drawings, diagrams, illustrations, schedules, and other data or information that are specifically prepared or assembled by or for Contractor and submitted by Contractor to illustrate some portion of the Work. Shop Drawings, whether approved or not, are not Drawings and are not Contract Documents.

38. *Site*—Lands or areas indicated in the Contract Documents as being furnished by Owner upon which the Work is to be performed, including rights-of-way and easements, and such other lands or areas furnished by Owner which are designated for the use of Contractor.

39. *Specifications*—The part of the Contract that consists of written requirements for materials, equipment, systems, standards, and workmanship as applied to the Work, and certain administrative requirements and procedural matters applicable to the Work.

40. *Subcontractor*—An individual or entity having a direct contract with Contractor or with any other Subcontractor for the performance of a part of the Work.

41. *Submittal*—A written or graphic document, prepared by or for Contractor, which the Contract Documents require Contractor to submit to Engineer, or that is indicated as a Submittal in the Schedule of Submittals accepted by Engineer. Submittals may include Shop Drawings and Samples; schedules; product data; Owner-delegated designs; sustainable design information; information on special procedures; testing plans; results of tests and evaluations, source quality-control testing and inspections, and field or Site quality-control testing and inspections; warranties and certifications; Suppliers' instructions and reports; records of delivery of spare parts and tools; operations and maintenance data; Project photographic documentation; record documents; and other such documents required by the Contract Documents. Submittals, whether or not approved or accepted by Engineer, are not Contract Documents. Change Proposals, Change Orders, Claims, notices, Applications for Payment, and requests for interpretation or clarification are not Submittals.

42. *Substantial Completion*—The time at which the Work (or a specified part thereof) has progressed to the point where, in the opinion of Engineer, the Work (or a specified part

Copyright© 2018 National Society of Professional Engineers, American Council of Engineering Companies, and American Society of Civil Engineers. All rights reserved.

thereof) is sufficiently complete, in accordance with the Contract Documents, so that the Work (or a specified part thereof) can be utilized for the purposes for which it is intended. The terms "substantially complete" and "substantially completed" as applied to all or part of the Work refer to Substantial Completion of such Work.

43. *Successful Bidder*—The Bidder to which the Owner makes an award of contract.

44. *Supplementary Conditions*—The part of the Contract that amends or supplements these General Conditions.

45. *Supplier*—A manufacturer, fabricator, supplier, distributor, or vendor having a direct contract with Contractor or with any Subcontractor to furnish materials or equipment to be incorporated in the Work by Contractor or a Subcontractor.

46. *Technical Data*

    a. Those items expressly identified as Technical Data in the Supplementary Conditions, with respect to either (1) existing subsurface conditions at or adjacent to the Site, or existing physical conditions at or adjacent to the Site including existing surface or subsurface structures (except Underground Facilities) or (2) Hazardous Environmental Conditions at the Site.

    b. If no such express identifications of Technical Data have been made with respect to conditions at the Site, then Technical Data is defined, with respect to conditions at the Site under Paragraphs 5.03, 5.04, and 5.06, as the data contained in boring logs, recorded measurements of subsurface water levels, assessments of the condition of subsurface facilities, laboratory test results, and other factual, objective information regarding conditions at the Site that are set forth in any geotechnical, environmental, or other Site or facilities conditions report prepared for the Project and made available to Contractor.

    c. Information and data regarding the presence or location of Underground Facilities are not intended to be categorized, identified, or defined as Technical Data, and instead Underground Facilities are shown or indicated on the Drawings.

47. *Underground Facilities*—All active or not-in-service underground lines, pipelines, conduits, ducts, encasements, cables, wires, manholes, vaults, tanks, tunnels, or other such facilities or systems at the Site, including but not limited to those facilities or systems that produce, transmit, distribute, or convey telephone or other communications, cable television, fiber optic transmissions, power, electricity, light, heat, gases, oil, crude oil products, liquid petroleum products, water, steam, waste, wastewater, storm water, other liquids or chemicals, or traffic or other control systems. An abandoned facility or system is not an Underground Facility.

48. *Unit Price Work*—Work to be paid for on the basis of unit prices.

49. *Work*—The entire construction or the various separately identifiable parts thereof required to be provided under the Contract Documents. Work includes and is the result of performing or providing all labor, services, and documentation necessary to produce such construction; furnishing, installing, and incorporating all materials and equipment into such construction; and may include related services such as testing, start-up, and commissioning, all as required by the Contract Documents.

Copyright© 2018 National Society of Professional Engineers, American Council of Engineering Companies, and American Society of Civil Engineers. All rights reserved.

50. *Work Change Directive*—A written directive to Contractor issued on or after the Effective Date of the Contract, signed by Owner and recommended by Engineer, ordering an addition, deletion, or revision in the Work.

1.02 *Terminology*

A. The words and terms discussed in Paragraphs 1.02.B, C, D, and E are not defined terms that require initial capital letters, but, when used in the Bidding Requirements or Contract Documents, have the indicated meaning.

B. *Intent of Certain Terms or Adjectives*: The Contract Documents include the terms "as allowed," "as approved," "as ordered," "as directed" or terms of like effect or import to authorize an exercise of professional judgment by Engineer. In addition, the adjectives "reasonable," "suitable," "acceptable," "proper," "satisfactory," or adjectives of like effect or import are used to describe an action or determination of Engineer as to the Work. It is intended that such exercise of professional judgment, action, or determination will be solely to evaluate, in general, the Work for compliance with the information in the Contract Documents and with the design concept of the Project as a functioning whole as shown or indicated in the Contract Documents (unless there is a specific statement indicating otherwise). The use of any such term or adjective is not intended to and shall not be effective to assign to Engineer any duty or authority to supervise or direct the performance of the Work, or any duty or authority to undertake responsibility contrary to the provisions of Article 10 or any other provision of the Contract Documents.

C. *Day*: The word "day" means a calendar day of 24 hours measured from midnight to the next midnight.

D. *Defective*: The word "defective," when modifying the word "Work," refers to Work that is unsatisfactory, faulty, or deficient in that it:

1. does not conform to the Contract Documents;

2. does not meet the requirements of any applicable inspection, reference standard, test, or approval referred to in the Contract Documents; or

3. has been damaged prior to Engineer's recommendation of final payment (unless responsibility for the protection thereof has been assumed by Owner at Substantial Completion in accordance with Paragraph 15.03 or Paragraph 15.04).

E. *Furnish, Install, Perform, Provide*

1. The word "furnish," when used in connection with services, materials, or equipment, means to supply and deliver said services, materials, or equipment to the Site (or some other specified location) ready for use or installation and in usable or operable condition.

2. The word "install," when used in connection with services, materials, or equipment, means to put into use or place in final position said services, materials, or equipment complete and ready for intended use.

3. The words "perform" or "provide," when used in connection with services, materials, or equipment, means to furnish and install said services, materials, or equipment complete and ready for intended use.

Copyright© 2018 National Society of Professional Engineers, American Council of Engineering Companies, and American Society of Civil Engineers. All rights reserved.

4. If the Contract Documents establish an obligation of Contractor with respect to specific services, materials, or equipment, but do not expressly use any of the four words "furnish," "install," "perform," or "provide," then Contractor shall furnish and install said services, materials, or equipment complete and ready for intended use.

F. *Contract Price or Contract Times*: References to a change in "Contract Price or Contract Times" or "Contract Times or Contract Price" or similar, indicate that such change applies to (1) Contract Price, (2) Contract Times, or (3) both Contract Price and Contract Times, as warranted, even if the term "or both" is not expressed.

G. Unless stated otherwise in the Contract Documents, words or phrases that have a well-known technical or construction industry or trade meaning are used in the Contract Documents in accordance with such recognized meaning.

ARTICLE 2—PRELIMINARY MATTERS

2.01 *Delivery of Performance and Payment Bonds; Evidence of Insurance*

A. *Performance and Payment Bonds*: When Contractor delivers the signed counterparts of the Agreement to Owner, Contractor shall also deliver to Owner the performance bond and payment bond (if the Contract requires Contractor to furnish such bonds).

B. *Evidence of Contractor's Insurance*: When Contractor delivers the signed counterparts of the Agreement to Owner, Contractor shall also deliver to Owner, with copies to each additional insured (as identified in the Contract), the certificates, endorsements, and other evidence of insurance required to be provided by Contractor in accordance with Article 6, except to the extent the Supplementary Conditions expressly establish other dates for delivery of specific insurance policies.

C. *Evidence of Owner's Insurance*: After receipt of the signed counterparts of the Agreement and all required bonds and insurance documentation, Owner shall promptly deliver to Contractor, with copies to each additional insured (as identified in the Contract), the certificates and other evidence of insurance required to be provided by Owner under Article 6.

2.02 *Copies of Documents*

A. Owner shall furnish to Contractor four printed copies of the Contract (including one fully signed counterpart of the Agreement), and one copy in electronic portable document format (PDF). Additional printed copies will be furnished upon request at the cost of reproduction.

B. Owner shall maintain and safeguard at least one original printed record version of the Contract, including Drawings and Specifications signed and sealed by Engineer and other design professionals. Owner shall make such original printed record version of the Contract available to Contractor for review. Owner may delegate the responsibilities under this provision to Engineer.

Copyright© 2018 National Society of Professional Engineers, American Council of Engineering Companies, and American Society of Civil Engineers. All rights reserved.

2.03 *Before Starting Construction*

A. *Preliminary Schedules*: Within 10 days after the Effective Date of the Contract (or as otherwise required by the Contract Documents), Contractor shall submit to Engineer for timely review:

1. a preliminary Progress Schedule indicating the times (numbers of days or dates) for starting and completing the various stages of the Work, including any Milestones specified in the Contract;

2. a preliminary Schedule of Submittals; and

3. a preliminary Schedule of Values for all of the Work which includes quantities and prices of items which when added together equal the Contract Price and subdivides the Work into component parts in sufficient detail to serve as the basis for progress payments during performance of the Work. Such prices will include an appropriate amount of overhead and profit applicable to each item of Work.

2.04 *Preconstruction Conference; Designation of Authorized Representatives*

A. Before any Work at the Site is started, a conference attended by Owner, Contractor, Engineer, and others as appropriate will be held to establish a working understanding among the parties as to the Work, and to discuss the schedules referred to in Paragraph 2.03.A, procedures for handling Shop Drawings, Samples, and other Submittals, processing Applications for Payment, electronic or digital transmittals, and maintaining required records.

B. At this conference Owner and Contractor each shall designate, in writing, a specific individual to act as its authorized representative with respect to the services and responsibilities under the Contract. Such individuals shall have the authority to transmit and receive information, render decisions relative to the Contract, and otherwise act on behalf of each respective party.

2.05 *Acceptance of Schedules*

A. At least 10 days before submission of the first Application for Payment a conference, attended by Contractor, Engineer, and others as appropriate, will be held to review the schedules submitted in accordance with Paragraph 2.03.A. No progress payment will be made to Contractor until acceptable schedules are submitted to Engineer.

1. The Progress Schedule will be acceptable to Engineer if it provides an orderly progression of the Work to completion within the Contract Times. Such acceptance will not impose on Engineer responsibility for the Progress Schedule, for sequencing, scheduling, or progress of the Work, nor interfere with or relieve Contractor from Contractor's full responsibility therefor.

2. Contractor's Schedule of Submittals will be acceptable to Engineer if it provides a workable arrangement for reviewing and processing the required submittals.

3. Contractor's Schedule of Values will be acceptable to Engineer as to form and substance if it provides a reasonable allocation of the Contract Price to the component parts of the Work.

4. If a schedule is not acceptable, Contractor will have an additional 10 days to revise and resubmit the schedule.

Copyright© 2018 National Society of Professional Engineers, American Council of Engineering Companies, and American Society of Civil Engineers. All rights reserved.

2.06 *Electronic Transmittals*

A. Except as otherwise stated elsewhere in the Contract, the Owner, Engineer, and Contractor may send, and shall accept, Electronic Documents transmitted by Electronic Means.

B. If the Contract does not establish protocols for Electronic Means, then Owner, Engineer, and Contractor shall jointly develop such protocols.

C. Subject to any governing protocols for Electronic Means, when transmitting Electronic Documents by Electronic Means, the transmitting party makes no representations as to long-term compatibility, usability, or readability of the Electronic Documents resulting from the recipient's use of software application packages, operating systems, or computer hardware differing from those used in the drafting or transmittal of the Electronic Documents.

ARTICLE 3—CONTRACT DOCUMENTS: INTENT, REQUIREMENTS, REUSE

3.01 *Intent*

A. The Contract Documents are complementary; what is required by one Contract Document is as binding as if required by all.

B. It is the intent of the Contract Documents to describe a functionally complete Project (or part thereof) to be constructed in accordance with the Contract Documents.

C. Unless otherwise stated in the Contract Documents, if there is a discrepancy between the electronic versions of the Contract Documents (including any printed copies derived from such electronic versions) and the printed record version, the printed record version will govern.

D. The Contract supersedes prior negotiations, representations, and agreements, whether written or oral.

E. Engineer will issue clarifications and interpretations of the Contract Documents as provided herein.

F. Any provision or part of the Contract Documents held to be void or unenforceable under any Law or Regulation will be deemed stricken, and all remaining provisions will continue to be valid and binding upon Owner and Contractor, which agree that the Contract Documents will be reformed to replace such stricken provision or part thereof with a valid and enforceable provision that comes as close as possible to expressing the intention of the stricken provision.

G. Nothing in the Contract Documents creates:

1. any contractual relationship between Owner or Engineer and any Subcontractor, Supplier, or other individual or entity performing or furnishing any of the Work, for the benefit of such Subcontractor, Supplier, or other individual or entity; or

2. any obligation on the part of Owner or Engineer to pay or to see to the payment of any money due any such Subcontractor, Supplier, or other individual or entity, except as may otherwise be required by Laws and Regulations.

Copyright© 2018 National Society of Professional Engineers, American Council of Engineering Companies, and American Society of Civil Engineers. All rights reserved.

3.02 *Reference Standards*

A. *Standards Specifications, Codes, Laws and Regulations*

1. Reference in the Contract Documents to standard specifications, manuals, reference standards, or codes of any technical society, organization, or association, or to Laws or Regulations, whether such reference be specific or by implication, means the standard specification, manual, reference standard, code, or Laws or Regulations in effect at the time of opening of Bids (or on the Effective Date of the Contract if there were no Bids), except as may be otherwise specifically stated in the Contract Documents.

2. No provision of any such standard specification, manual, reference standard, or code, and no instruction of a Supplier, will be effective to change the duties or responsibilities of Owner, Contractor, or Engineer from those set forth in the part of the Contract Documents prepared by or for Engineer. No such provision or instruction shall be effective to assign to Owner or Engineer any duty or authority to supervise or direct the performance of the Work, or any duty or authority to undertake responsibility inconsistent with the provisions of the part of the Contract Documents prepared by or for Engineer.

3.03 *Reporting and Resolving Discrepancies*

A. *Reporting Discrepancies*

1. *Contractor's Verification of Figures and Field Measurements*: Before undertaking each part of the Work, Contractor shall carefully study the Contract Documents, and check and verify pertinent figures and dimensions therein, particularly with respect to applicable field measurements. Contractor shall promptly report in writing to Engineer any conflict, error, ambiguity, or discrepancy that Contractor discovers, or has actual knowledge of, and shall not proceed with any Work affected thereby until the conflict, error, ambiguity, or discrepancy is resolved by a clarification or interpretation by Engineer, or by an amendment or supplement to the Contract issued pursuant to Paragraph 11.01.

2. *Contractor's Review of Contract Documents*: If, before or during the performance of the Work, Contractor discovers any conflict, error, ambiguity, or discrepancy within the Contract Documents, or between the Contract Documents and (a) any applicable Law or Regulation, (b) actual field conditions, (c) any standard specification, manual, reference standard, or code, or (d) any instruction of any Supplier, then Contractor shall promptly report it to Engineer in writing. Contractor shall not proceed with the Work affected thereby (except in an emergency as required by Paragraph 7.15) until the conflict, error, ambiguity, or discrepancy is resolved, by a clarification or interpretation by Engineer, or by an amendment or supplement to the Contract issued pursuant to Paragraph 11.01.

3. Contractor shall not be liable to Owner or Engineer for failure to report any conflict, error, ambiguity, or discrepancy in the Contract Documents unless Contractor had actual knowledge thereof.

B. *Resolving Discrepancies*

1. Except as may be otherwise specifically stated in the Contract Documents, the provisions of the part of the Contract Documents prepared by or for Engineer take

Copyright© 2018 National Society of Professional Engineers, American Council of Engineering Companies, and American Society of Civil Engineers. All rights reserved.

precedence in resolving any conflict, error, ambiguity, or discrepancy between such provisions of the Contract Documents and:

a. the provisions of any standard specification, manual, reference standard, or code, or the instruction of any Supplier (whether or not specifically incorporated by reference as a Contract Document); or

b. the provisions of any Laws or Regulations applicable to the performance of the Work (unless such an interpretation of the provisions of the Contract Documents would result in violation of such Law or Regulation).

3.04 *Requirements of the Contract Documents*

A. During the performance of the Work and until final payment, Contractor and Owner shall submit to the Engineer in writing all matters in question concerning the requirements of the Contract Documents (sometimes referred to as requests for information or interpretation—RFIs), or relating to the acceptability of the Work under the Contract Documents, as soon as possible after such matters arise. Engineer will be the initial interpreter of the requirements of the Contract Documents, and judge of the acceptability of the Work.

B. Engineer will, with reasonable promptness, render a written clarification, interpretation, or decision on the issue submitted, or initiate an amendment or supplement to the Contract Documents. Engineer's written clarification, interpretation, or decision will be final and binding on Contractor, unless it appeals by submitting a Change Proposal, and on Owner, unless it appeals by filing a Claim.

C. If a submitted matter in question concerns terms and conditions of the Contract Documents that do not involve (1) the performance or acceptability of the Work under the Contract Documents, (2) the design (as set forth in the Drawings, Specifications, or otherwise), or (3) other engineering or technical matters, then Engineer will promptly notify Owner and Contractor in writing that Engineer is unable to provide a decision or interpretation. If Owner and Contractor are unable to agree on resolution of such a matter in question, either party may pursue resolution as provided in Article 12.

3.05 *Reuse of Documents*

A. Contractor and its Subcontractors and Suppliers shall not:

1. have or acquire any title to or ownership rights in any of the Drawings, Specifications, or other documents (or copies of any thereof) prepared by or bearing the seal of Engineer or its consultants, including electronic media versions, or reuse any such Drawings, Specifications, other documents, or copies thereof on extensions of the Project or any other project without written consent of Owner and Engineer and specific written verification or adaptation by Engineer; or

2. have or acquire any title or ownership rights in any other Contract Documents, reuse any such Contract Documents for any purpose without Owner's express written consent, or violate any copyrights pertaining to such Contract Documents.

B. The prohibitions of this Paragraph 3.05 will survive final payment, or termination of the Contract. Nothing herein precludes Contractor from retaining copies of the Contract Documents for record purposes.

Copyright© 2018 National Society of Professional Engineers, American Council of Engineering Companies, and American Society of Civil Engineers. All rights reserved.

ARTICLE 4—COMMENCEMENT AND PROGRESS OF THE WORK

4.01 *Commencement of Contract Times; Notice to Proceed*

A. The Contract Times will commence to run on the 30th day after the Effective Date of the Contract or, if a Notice to Proceed is given, on the day indicated in the Notice to Proceed. A Notice to Proceed may be given at any time within 30 days after the Effective Date of the Contract. In no event will the Contract Times commence to run later than the 60th day after the day of Bid opening or the 30th day after the Effective Date of the Contract, whichever date is earlier.

4.02 *Starting the Work*

A. Contractor shall start to perform the Work on the date when the Contract Times commence to run. No Work may be done at the Site prior to such date.

4.03 *Reference Points*

A. Owner shall provide engineering surveys to establish reference points for construction which in Engineer's judgment are necessary to enable Contractor to proceed with the Work. Contractor shall be responsible for laying out the Work, shall protect and preserve the established reference points and property monuments, and shall make no changes or relocations without the prior written approval of Owner. Contractor shall report to Engineer whenever any reference point or property monument is lost or destroyed or requires relocation because of necessary changes in grades or locations, and shall be responsible for the accurate replacement or relocation of such reference points or property monuments by professionally qualified personnel.

4.04 *Progress Schedule*

A. Contractor shall adhere to the Progress Schedule established in accordance with Paragraph 2.05 as it may be adjusted from time to time as provided below.

1. Contractor shall submit to Engineer for acceptance (to the extent indicated in Paragraph 2.05) proposed adjustments in the Progress Schedule that will not result in changing the Contract Times.

2. Proposed adjustments in the Progress Schedule that will change the Contract Times must be submitted in accordance with the requirements of Article 11.

B. Contractor shall carry on the Work and adhere to the Progress Schedule during all disputes or disagreements with Owner. No Work will be delayed or postponed pending resolution of any disputes or disagreements, or during any appeal process, except as permitted by Paragraph 16.04, or as Owner and Contractor may otherwise agree in writing.

4.05 *Delays in Contractor's Progress*

A. If Owner, Engineer, or anyone for whom Owner is responsible, delays, disrupts, or interferes with the performance or progress of the Work, then Contractor shall be entitled to an equitable adjustment in Contract Price or Contract Times.

B. Contractor shall not be entitled to an adjustment in Contract Price or Contract Times for delay, disruption, or interference caused by or within the control of Contractor. Delay, disruption, and interference attributable to and within the control of a Subcontractor or Supplier shall be deemed to be within the control of Contractor.

Copyright© 2018 National Society of Professional Engineers, American Council of Engineering Companies, and American Society of Civil Engineers. All rights reserved.

C. If Contractor's performance or progress is delayed, disrupted, or interfered with by unanticipated causes not the fault of and beyond the control of Owner, Contractor, and those for which they are responsible, then Contractor shall be entitled to an equitable adjustment in Contract Times. Such an adjustment will be Contractor's sole and exclusive remedy for the delays, disruption, and interference described in this paragraph. Causes of delay, disruption, or interference that may give rise to an adjustment in Contract Times under this paragraph include but are not limited to the following:

1. Severe and unavoidable natural catastrophes such as fires, floods, epidemics, and earthquakes;
2. Abnormal weather conditions;
3. Acts or failures to act of third-party utility owners or other third-party entities (other than those third-party utility owners or other third-party entities performing other work at or adjacent to the Site as arranged by or under contract with Owner, as contemplated in Article 8); and
4. Acts of war or terrorism.

D. Contractor's entitlement to an adjustment of Contract Times or Contract Price is limited as follows:

1. Contractor's entitlement to an adjustment of the Contract Times is conditioned on the delay, disruption, or interference adversely affecting an activity on the critical path to completion of the Work, as of the time of the delay, disruption, or interference.
2. Contractor shall not be entitled to an adjustment in Contract Price for any delay, disruption, or interference if such delay is concurrent with a delay, disruption, or interference caused by or within the control of Contractor. Such a concurrent delay by Contractor shall not preclude an adjustment of Contract Times to which Contractor is otherwise entitled.
3. Adjustments of Contract Times or Contract Price are subject to the provisions of Article 11.

E. Each Contractor request or Change Proposal seeking an increase in Contract Times or Contract Price must be supplemented by supporting data that sets forth in detail the following:

1. The circumstances that form the basis for the requested adjustment;
2. The date upon which each cause of delay, disruption, or interference began to affect the progress of the Work;
3. The date upon which each cause of delay, disruption, or interference ceased to affect the progress of the Work;
4. The number of days' increase in Contract Times claimed as a consequence of each such cause of delay, disruption, or interference; and
5. The impact on Contract Price, in accordance with the provisions of Paragraph 11.07.

Contractor shall also furnish such additional supporting documentation as Owner or Engineer may require including, where appropriate, a revised progress schedule indicating all the activities affected by the delay, disruption, or interference, and an explanation of the

Copyright© 2018 National Society of Professional Engineers, American Council of Engineering Companies, and American Society of Civil Engineers. All rights reserved.

effect of the delay, disruption, or interference on the critical path to completion of the Work.

F. Delays, disruption, and interference to the performance or progress of the Work resulting from the existence of a differing subsurface or physical condition, an Underground Facility that was not shown or indicated by the Contract Documents, or not shown or indicated with reasonable accuracy, and those resulting from Hazardous Environmental Conditions, are governed by Article 5, together with the provisions of Paragraphs 4.05.D and 4.05.E.

G. Paragraph 8.03 addresses delays, disruption, and interference to the performance or progress of the Work resulting from the performance of certain other work at or adjacent to the Site.

ARTICLE 5—SITE; SUBSURFACE AND PHYSICAL CONDITIONS; HAZARDOUS ENVIRONMENTAL CONDITIONS

5.01 *Availability of Lands*

A. Owner shall furnish the Site. Owner shall notify Contractor in writing of any encumbrances or restrictions not of general application but specifically related to use of the Site with which Contractor must comply in performing the Work.

B. Upon reasonable written request, Owner shall furnish Contractor with a current statement of record legal title and legal description of the lands upon which permanent improvements are to be made and Owner's interest therein as necessary for giving notice of or filing a mechanic's or construction lien against such lands in accordance with applicable Laws and Regulations.

C. Contractor shall provide for all additional lands and access thereto that may be required for temporary construction facilities or storage of materials and equipment.

5.02 *Use of Site and Other Areas*

A. *Limitation on Use of Site and Other Areas*

1. Contractor shall confine construction equipment, temporary construction facilities, the storage of materials and equipment, and the operations of workers to the Site, adjacent areas that Contractor has arranged to use through construction easements or otherwise, and other adjacent areas permitted by Laws and Regulations, and shall not unreasonably encumber the Site and such other adjacent areas with construction equipment or other materials or equipment. Contractor shall assume full responsibility for (a) damage to the Site; (b) damage to any such other adjacent areas used for Contractor's operations; (c) damage to any other adjacent land or areas, or to improvements, structures, utilities, or similar facilities located at such adjacent lands or areas; and (d) for injuries and losses sustained by the owners or occupants of any such land or areas; provided that such damage or injuries result from the performance of the Work or from other actions or conduct of the Contractor or those for which Contractor is responsible.

2. If a damage or injury claim is made by the owner or occupant of any such land or area because of the performance of the Work, or because of other actions or conduct of the Contractor or those for which Contractor is responsible, Contractor shall (a) take immediate corrective or remedial action as required by Paragraph 7.13, or otherwise;

Copyright© 2018 National Society of Professional Engineers, American Council of Engineering Companies, and American Society of Civil Engineers. All rights reserved.

(b) promptly attempt to settle the claim as to all parties through negotiations with such owner or occupant, or otherwise resolve the claim by arbitration or other dispute resolution proceeding, or in a court of competent jurisdiction; and (c) to the fullest extent permitted by Laws and Regulations, indemnify and hold harmless Owner and Engineer, and the officers, directors, members, partners, employees, agents, consultants and subcontractors of each and any of them, from and against any such claim, and against all costs, losses, and damages (including but not limited to all fees and charges of engineers, architects, attorneys, and other professionals and all court or arbitration or other dispute resolution costs) arising out of or relating to any claim or action, legal or equitable, brought by any such owner or occupant against Owner, Engineer, or any other party indemnified hereunder to the extent caused directly or indirectly, in whole or in part by, or based upon, Contractor's performance of the Work, or because of other actions or conduct of the Contractor or those for which Contractor is responsible.

B. *Removal of Debris During Performance of the Work*: During the progress of the Work the Contractor shall keep the Site and other adjacent areas free from accumulations of waste materials, rubbish, and other debris. Removal and disposal of such waste materials, rubbish, and other debris will conform to applicable Laws and Regulations.

C. *Cleaning*: Prior to Substantial Completion of the Work Contractor shall clean the Site and the Work and make it ready for utilization by Owner. At the completion of the Work Contractor shall remove from the Site and adjacent areas all tools, appliances, construction equipment and machinery, and surplus materials and shall restore to original condition all property not designated for alteration by the Contract Documents.

D. *Loading of Structures*: Contractor shall not load nor permit any part of any structure to be loaded in any manner that will endanger the structure, nor shall Contractor subject any part of the Work or adjacent structures or land to stresses or pressures that will endanger them.

5.03 *Subsurface and Physical Conditions*

A. *Reports and Drawings*: The Supplementary Conditions identify:

1. Those reports of explorations and tests of subsurface conditions at or adjacent to the Site that contain Technical Data;

2. Those drawings of existing physical conditions at or adjacent to the Site, including those drawings depicting existing surface or subsurface structures at or adjacent to the Site (except Underground Facilities), that contain Technical Data; and

3. Technical Data contained in such reports and drawings.

B. *Underground Facilities*: Underground Facilities are shown or indicated on the Drawings, pursuant to Paragraph 5.05, and not in the drawings referred to in Paragraph 5.03.A. Information and data regarding the presence or location of Underground Facilities are not intended to be categorized, identified, or defined as Technical Data.

C. *Reliance by Contractor on Technical Data*: Contractor may rely upon the accuracy of the Technical Data expressly identified in the Supplementary Conditions with respect to such reports and drawings, but such reports and drawings are not Contract Documents. If no such express identification has been made, then Contractor may rely upon the accuracy of the Technical Data as defined in Paragraph 1.01.A.46.b.

Copyright© 2018 National Society of Professional Engineers, American Council of Engineering Companies, and American Society of Civil Engineers. All rights reserved.

D. *Limitations of Other Data and Documents*: Except for such reliance on Technical Data, Contractor may not rely upon or make any claim against Owner or Engineer, or any of their officers, directors, members, partners, employees, agents, consultants, or subcontractors, with respect to:

1. the completeness of such reports and drawings for Contractor's purposes, including, but not limited to, any aspects of the means, methods, techniques, sequences, and procedures of construction to be employed by Contractor, and safety precautions and programs incident thereto;
2. other data, interpretations, opinions, and information contained in such reports or shown or indicated in such drawings;
3. the contents of other Site-related documents made available to Contractor, such as record drawings from other projects at or adjacent to the Site, or Owner's archival documents concerning the Site; or
4. any Contractor interpretation of or conclusion drawn from any Technical Data or any such other data, interpretations, opinions, or information.

5.04 *Differing Subsurface or Physical Conditions*

A. *Notice by Contractor*: If Contractor believes that any subsurface or physical condition that is uncovered or revealed at the Site:

1. is of such a nature as to establish that any Technical Data on which Contractor is entitled to rely as provided in Paragraph 5.03 is materially inaccurate;
2. is of such a nature as to require a change in the Drawings or Specifications;
3. differs materially from that shown or indicated in the Contract Documents; or
4. is of an unusual nature, and differs materially from conditions ordinarily encountered and generally recognized as inherent in work of the character provided for in the Contract Documents;

then Contractor shall, promptly after becoming aware thereof and before further disturbing the subsurface or physical conditions or performing any Work in connection therewith (except in an emergency as required by Paragraph 7.15), notify Owner and Engineer in writing about such condition. Contractor shall not further disturb such condition or perform any Work in connection therewith (except with respect to an emergency) until receipt of a written statement permitting Contractor to do so.

B. *Engineer's Review*: After receipt of written notice as required by the preceding paragraph, Engineer will promptly review the subsurface or physical condition in question; determine whether it is necessary for Owner to obtain additional exploration or tests with respect to the condition; conclude whether the condition falls within any one or more of the differing site condition categories in Paragraph 5.04.A; obtain any pertinent cost or schedule information from Contractor; prepare recommendations to Owner regarding the Contractor's resumption of Work in connection with the subsurface or physical condition in question and the need for any change in the Drawings or Specifications; and advise Owner in writing of Engineer's findings, conclusions, and recommendations.

C. *Owner's Statement to Contractor Regarding Site Condition*: After receipt of Engineer's written findings, conclusions, and recommendations, Owner shall issue a written statement

Copyright© 2018 National Society of Professional Engineers, American Council of Engineering Companies, and American Society of Civil Engineers. All rights reserved.

to Contractor (with a copy to Engineer) regarding the subsurface or physical condition in question, addressing the resumption of Work in connection with such condition, indicating whether any change in the Drawings or Specifications will be made, and adopting or rejecting Engineer's written findings, conclusions, and recommendations, in whole or in part.

D. *Early Resumption of Work*: If at any time Engineer determines that Work in connection with the subsurface or physical condition in question may resume prior to completion of Engineer's review or Owner's issuance of its statement to Contractor, because the condition in question has been adequately documented, and analyzed on a preliminary basis, then the Engineer may at its discretion instruct Contractor to resume such Work.

E. *Possible Price and Times Adjustments*

1. Contractor shall be entitled to an equitable adjustment in Contract Price or Contract Times, to the extent that the existence of a differing subsurface or physical condition, or any related delay, disruption, or interference, causes an increase or decrease in Contractor's cost of, or time required for, performance of the Work; subject, however, to the following:

    a. Such condition must fall within any one or more of the categories described in Paragraph 5.04.A;

    b. With respect to Work that is paid for on a unit price basis, any adjustment in Contract Price will be subject to the provisions of Paragraph 13.03; and,

    c. Contractor's entitlement to an adjustment of the Contract Times is subject to the provisions of Paragraphs 4.05.D and 4.05.E.

2. Contractor shall not be entitled to any adjustment in the Contract Price or Contract Times with respect to a subsurface or physical condition if:

    a. Contractor knew of the existence of such condition at the time Contractor made a commitment to Owner with respect to Contract Price and Contract Times by the submission of a Bid or becoming bound under a negotiated contract, or otherwise;

    b. The existence of such condition reasonably could have been discovered or revealed as a result of any examination, investigation, exploration, test, or study of the Site and contiguous areas expressly required by the Bidding Requirements or Contract Documents to be conducted by or for Contractor prior to Contractor's making such commitment; or

    c. Contractor failed to give the written notice required by Paragraph 5.04.A.

3. If Owner and Contractor agree regarding Contractor's entitlement to and the amount or extent of any adjustment in the Contract Price or Contract Times, then any such adjustment will be set forth in a Change Order.

4. Contractor may submit a Change Proposal regarding its entitlement to or the amount or extent of any adjustment in the Contract Price or Contract Times, no later than 30 days after Owner's issuance of the Owner's written statement to Contractor regarding the subsurface or physical condition in question.

F. *Underground Facilities; Hazardous Environmental Conditions*: Paragraph 5.05 governs rights and responsibilities regarding the presence or location of Underground Facilities.

Copyright© 2018 National Society of Professional Engineers, American Council of Engineering Companies, and American Society of Civil Engineers. All rights reserved.

Paragraph 5.06 governs rights and responsibilities regarding Hazardous Environmental Conditions. The provisions of Paragraphs 5.03 and 5.04 are not applicable to the presence or location of Underground Facilities, or to Hazardous Environmental Conditions.

5.05 *Underground Facilities*

A. *Contractor's Responsibilities*: Unless it is otherwise expressly provided in the Supplementary Conditions, the cost of all of the following are included in the Contract Price, and Contractor shall have full responsibility for:

1. reviewing and checking all information and data regarding existing Underground Facilities at the Site;
2. complying with applicable state and local utility damage prevention Laws and Regulations;
3. verifying the actual location of those Underground Facilities shown or indicated in the Contract Documents as being within the area affected by the Work, by exposing such Underground Facilities during the course of construction;
4. coordination of the Work with the owners (including Owner) of such Underground Facilities, during construction; and
5. the safety and protection of all existing Underground Facilities at the Site, and repairing any damage thereto resulting from the Work.

B. *Notice by Contractor*: If Contractor believes that an Underground Facility that is uncovered or revealed at the Site was not shown or indicated on the Drawings, or was not shown or indicated on the Drawings with reasonable accuracy, then Contractor shall, promptly after becoming aware thereof and before further disturbing conditions affected thereby or performing any Work in connection therewith (except in an emergency as required by Paragraph 7.15), notify Owner and Engineer in writing regarding such Underground Facility.

C. *Engineer's Review*: Engineer will:

1. promptly review the Underground Facility and conclude whether such Underground Facility was not shown or indicated on the Drawings, or was not shown or indicated with reasonable accuracy;
2. identify and communicate with the owner of the Underground Facility; prepare recommendations to Owner (and if necessary issue any preliminary instructions to Contractor) regarding the Contractor's resumption of Work in connection with the Underground Facility in question;
3. obtain any pertinent cost or schedule information from Contractor; determine the extent, if any, to which a change is required in the Drawings or Specifications to reflect and document the consequences of the existence or location of the Underground Facility; and
4. advise Owner in writing of Engineer's findings, conclusions, and recommendations.

During such time, Contractor shall be responsible for the safety and protection of such Underground Facility.

D. *Owner's Statement to Contractor Regarding Underground Facility*: After receipt of Engineer's written findings, conclusions, and recommendations, Owner shall issue a written

Copyright© 2018 National Society of Professional Engineers, American Council of Engineering Companies, and American Society of Civil Engineers. All rights reserved.

statement to Contractor (with a copy to Engineer) regarding the Underground Facility in question addressing the resumption of Work in connection with such Underground Facility, indicating whether any change in the Drawings or Specifications will be made, and adopting or rejecting Engineer's written findings, conclusions, and recommendations in whole or in part.

E. *Early Resumption of Work*: If at any time Engineer determines that Work in connection with the Underground Facility may resume prior to completion of Engineer's review or Owner's issuance of its statement to Contractor, because the Underground Facility in question and conditions affected by its presence have been adequately documented, and analyzed on a preliminary basis, then the Engineer may at its discretion instruct Contractor to resume such Work.

F. *Possible Price and Times Adjustments*

1. Contractor shall be entitled to an equitable adjustment in the Contract Price or Contract Times, to the extent that any existing Underground Facility at the Site that was not shown or indicated on the Drawings, or was not shown or indicated with reasonable accuracy, or any related delay, disruption, or interference, causes an increase or decrease in Contractor's cost of, or time required for, performance of the Work; subject, however, to the following:

   a. With respect to Work that is paid for on a unit price basis, any adjustment in Contract Price will be subject to the provisions of Paragraph 13.03;

   b. Contractor's entitlement to an adjustment of the Contract Times is subject to the provisions of Paragraphs 4.05.D and 4.05.E; and

   c. Contractor gave the notice required in Paragraph 5.05.B.

2. If Owner and Contractor agree regarding Contractor's entitlement to and the amount or extent of any adjustment in the Contract Price or Contract Times, then any such adjustment will be set forth in a Change Order.

3. Contractor may submit a Change Proposal regarding its entitlement to or the amount or extent of any adjustment in the Contract Price or Contract Times, no later than 30 days after Owner's issuance of the Owner's written statement to Contractor regarding the Underground Facility in question.

4. The information and data shown or indicated on the Drawings with respect to existing Underground Facilities at the Site is based on information and data (a) furnished by the owners of such Underground Facilities, or by others, (b) obtained from available records, or (c) gathered in an investigation conducted in accordance with the current edition of ASCE 38, Standard Guideline for the Collection and Depiction of Existing Subsurface Utility Data, by the American Society of Civil Engineers. If such information or data is incorrect or incomplete, Contractor's remedies are limited to those set forth in this Paragraph 5.05.F.

5.06 *Hazardous Environmental Conditions at Site*

A. *Reports and Drawings*: The Supplementary Conditions identify:

1. those reports known to Owner relating to Hazardous Environmental Conditions that have been identified at or adjacent to the Site;

Copyright© 2018 National Society of Professional Engineers, American Council of Engineering Companies, and American Society of Civil Engineers. All rights reserved.

2. drawings known to Owner relating to Hazardous Environmental Conditions that have been identified at or adjacent to the Site; and

3. Technical Data contained in such reports and drawings.

B. *Reliance by Contractor on Technical Data Authorized*: Contractor may rely upon the accuracy of the Technical Data expressly identified in the Supplementary Conditions with respect to such reports and drawings, but such reports and drawings are not Contract Documents. If no such express identification has been made, then Contractor may rely on the accuracy of the Technical Data as defined in Paragraph 1.01.A.46.b. Except for such reliance on Technical Data, Contractor may not rely upon or make any claim against Owner or Engineer, or any of their officers, directors, members, partners, employees, agents, consultants, or subcontractors, with respect to:

1. the completeness of such reports and drawings for Contractor's purposes, including, but not limited to, any aspects of the means, methods, techniques, sequences and procedures of construction to be employed by Contractor, and safety precautions and programs incident thereto;

2. other data, interpretations, opinions, and information contained in such reports or shown or indicated in such drawings; or

3. any Contractor interpretation of or conclusion drawn from any Technical Data or any such other data, interpretations, opinions or information.

C. Contractor shall not be responsible for removing or remediating any Hazardous Environmental Condition encountered, uncovered, or revealed at the Site unless such removal or remediation is expressly identified in the Contract Documents to be within the scope of the Work.

D. Contractor shall be responsible for controlling, containing, and duly removing all Constituents of Concern brought to the Site by Contractor, Subcontractors, Suppliers, or anyone else for whom Contractor is responsible, and for any associated costs; and for the costs of removing and remediating any Hazardous Environmental Condition created by the presence of any such Constituents of Concern.

E. If Contractor encounters, uncovers, or reveals a Hazardous Environmental Condition whose removal or remediation is not expressly identified in the Contract Documents as being within the scope of the Work, or if Contractor or anyone for whom Contractor is responsible creates a Hazardous Environmental Condition, then Contractor shall immediately: (1) secure or otherwise isolate such condition; (2) stop all Work in connection with such condition and in any area affected thereby (except in an emergency as required by Paragraph 7.15); and (3) notify Owner and Engineer (and promptly thereafter confirm such notice in writing). Owner shall promptly consult with Engineer concerning the necessity for Owner to retain a qualified expert to evaluate such condition or take corrective action, if any. Promptly after consulting with Engineer, Owner shall take such actions as are necessary to permit Owner to timely obtain required permits and provide Contractor the written notice required by Paragraph 5.06.F. If Contractor or anyone for whom Contractor is responsible created the Hazardous Environmental Condition in question, then Owner may remove and remediate the Hazardous Environmental Condition, and impose a set-off against payments to account for the associated costs.

Copyright© 2018 National Society of Professional Engineers, American Council of Engineering Companies, and American Society of Civil Engineers. All rights reserved.

F. Contractor shall not resume Work in connection with such Hazardous Environmental Condition or in any affected area until after Owner has obtained any required permits related thereto, and delivered written notice to Contractor either (1) specifying that such condition and any affected area is or has been rendered safe for the resumption of Work, or (2) specifying any special conditions under which such Work may be resumed safely.

G. If Owner and Contractor cannot agree as to entitlement to or on the amount or extent, if any, of any adjustment in Contract Price or Contract Times, as a result of such Work stoppage, such special conditions under which Work is agreed to be resumed by Contractor, or any costs or expenses incurred in response to the Hazardous Environmental Condition, then within 30 days of Owner's written notice regarding the resumption of Work, Contractor may submit a Change Proposal, or Owner may impose a set-off. Entitlement to any such adjustment is subject to the provisions of Paragraphs 4.05.D, 4.05.E, 11.07, and 11.08.

H. If, after receipt of such written notice, Contractor does not agree to resume such Work based on a reasonable belief it is unsafe, or does not agree to resume such Work under such special conditions, then Owner may order the portion of the Work that is in the area affected by such condition to be deleted from the Work, following the contractual change procedures in Article 11. Owner may have such deleted portion of the Work performed by Owner's own forces or others in accordance with Article 8.

I. To the fullest extent permitted by Laws and Regulations, Owner shall indemnify and hold harmless Contractor, Subcontractors, and Engineer, and the officers, directors, members, partners, employees, agents, consultants, and subcontractors of each and any of them, from and against all claims, costs, losses, and damages (including but not limited to all fees and charges of engineers, architects, attorneys, and other professionals, and all court, arbitration, or other dispute resolution costs) arising out of or relating to a Hazardous Environmental Condition, provided that such Hazardous Environmental Condition (1) was not shown or indicated in the Drawings, Specifications, or other Contract Documents, identified as Technical Data entitled to limited reliance pursuant to Paragraph 5.06.B, or identified in the Contract Documents to be included within the scope of the Work, and (2) was not created by Contractor or by anyone for whom Contractor is responsible. Nothing in this Paragraph 5.06.I obligates Owner to indemnify any individual or entity from and against the consequences of that individual's or entity's own negligence.

J. To the fullest extent permitted by Laws and Regulations, Contractor shall indemnify and hold harmless Owner and Engineer, and the officers, directors, members, partners, employees, agents, consultants, and subcontractors of each and any of them, from and against all claims, costs, losses, and damages (including but not limited to all fees and charges of engineers, architects, attorneys, and other professionals and all court or arbitration or other dispute resolution costs) arising out of or relating to the failure to control, contain, or remove a Constituent of Concern brought to the Site by Contractor or by anyone for whom Contractor is responsible, or to a Hazardous Environmental Condition created by Contractor or by anyone for whom Contractor is responsible. Nothing in this Paragraph 5.06.J obligates Contractor to indemnify any individual or entity from and against the consequences of that individual's or entity's own negligence.

K. The provisions of Paragraphs 5.03, 5.04, and 5.05 do not apply to the presence of Constituents of Concern or to a Hazardous Environmental Condition uncovered or revealed at the Site.

Copyright© 2018 National Society of Professional Engineers, American Council of Engineering Companies, and American Society of Civil Engineers. All rights reserved.

ARTICLE 6—BONDS AND INSURANCE

6.01 *Performance, Payment, and Other Bonds*

A. Contractor shall furnish a performance bond and a payment bond, each in an amount at least equal to the Contract Price, as security for the faithful performance and payment of Contractor's obligations under the Contract. These bonds must remain in effect until one year after the date when final payment becomes due or until completion of the correction period specified in Paragraph 15.08, whichever is later, except as provided otherwise by Laws or Regulations, the terms of a prescribed bond form, the Supplementary Conditions, or other provisions of the Contract.

B. Contractor shall also furnish such other bonds (if any) as are required by the Supplementary Conditions or other provisions of the Contract.

C. All bonds must be in the form included in the Bidding Documents or otherwise specified by Owner prior to execution of the Contract, except as provided otherwise by Laws or Regulations, and must be issued and signed by a surety named in "Companies Holding Certificates of Authority as Acceptable Sureties on Federal Bonds and as Acceptable Reinsuring Companies" as published in Department Circular 570 (as amended and supplemented) by the Bureau of the Fiscal Service, U.S. Department of the Treasury. A bond signed by an agent or attorney-in-fact must be accompanied by a certified copy of that individual's authority to bind the surety. The evidence of authority must show that it is effective on the date the agent or attorney-in-fact signed the accompanying bond.

D. Contractor shall obtain the required bonds from surety companies that are duly licensed or authorized, in the state or jurisdiction in which the Project is located, to issue bonds in the required amounts.

E. If the surety on a bond furnished by Contractor is declared bankrupt or becomes insolvent, or the surety ceases to meet the requirements above, then Contractor shall promptly notify Owner and Engineer in writing and shall, within 20 days after the event giving rise to such notification, provide another bond and surety, both of which must comply with the bond and surety requirements above.

F. If Contractor has failed to obtain a required bond, Owner may exclude the Contractor from the Site and exercise Owner's termination rights under Article 16.

G. Upon request to Owner from any Subcontractor, Supplier, or other person or entity claiming to have furnished labor, services, materials, or equipment used in the performance of the Work, Owner shall provide a copy of the payment bond to such person or entity.

H. Upon request to Contractor from any Subcontractor, Supplier, or other person or entity claiming to have furnished labor, services, materials, or equipment used in the performance of the Work, Contractor shall provide a copy of the payment bond to such person or entity.

6.02 *Insurance—General Provisions*

A. Owner and Contractor shall obtain and maintain insurance as required in this article and in the Supplementary Conditions.

B. All insurance required by the Contract to be purchased and maintained by Owner or Contractor shall be obtained from insurance companies that are duly licensed or authorized in the state or jurisdiction in which the Project is located to issue insurance policies for the

Copyright© 2018 National Society of Professional Engineers, American Council of Engineering Companies, and American Society of Civil Engineers. All rights reserved.

required limits and coverages. Unless a different standard is indicated in the Supplementary Conditions, all companies that provide insurance policies required under this Contract shall have an A.M. Best rating of A-VII or better.

C. Alternative forms of insurance coverage, including but not limited to self-insurance and "Occupational Accident and Excess Employer's Indemnity Policies," are not sufficient to meet the insurance requirements of this Contract, unless expressly allowed in the Supplementary Conditions.

D. Contractor shall deliver to Owner, with copies to each additional insured identified in the Contract, certificates of insurance and endorsements establishing that Contractor has obtained and is maintaining the policies and coverages required by the Contract. Upon request by Owner or any other insured, Contractor shall also furnish other evidence of such required insurance, including but not limited to copies of policies, documentation of applicable self-insured retentions (if allowed) and deductibles, full disclosure of all relevant exclusions, and evidence of insurance required to be purchased and maintained by Subcontractors or Suppliers. In any documentation furnished under this provision, Contractor, Subcontractors, and Suppliers may block out (redact) (1) any confidential premium or pricing information and (2) any wording specific to a project or jurisdiction other than those applicable to this Contract.

E. Owner shall deliver to Contractor, with copies to each additional insured identified in the Contract, certificates of insurance and endorsements establishing that Owner has obtained and is maintaining the policies and coverages required of Owner by the Contract (if any). Upon request by Contractor or any other insured, Owner shall also provide other evidence of such required insurance (if any), including but not limited to copies of policies, documentation of applicable self-insured retentions (if allowed) and deductibles, and full disclosure of all relevant exclusions. In any documentation furnished under this provision, Owner may block out (redact) (1) any confidential premium or pricing information and (2) any wording specific to a project or jurisdiction other than those relevant to this Contract.

F. Failure of Owner or Contractor to demand such certificates or other evidence of the other party's full compliance with these insurance requirements, or failure of Owner or Contractor to identify a deficiency in compliance from the evidence provided, will not be construed as a waiver of the other party's obligation to obtain and maintain such insurance.

G. In addition to the liability insurance required to be provided by Contractor, the Owner, at Owner's option, may purchase and maintain Owner's own liability insurance. Owner's liability policies, if any, operate separately and independently from policies required to be provided by Contractor, and Contractor cannot rely upon Owner's liability policies for any of Contractor's obligations to the Owner, Engineer, or third parties.

H. Contractor shall require:

1. Subcontractors to purchase and maintain worker's compensation, commercial general liability, and other insurance that is appropriate for their participation in the Project, and to name as additional insureds Owner and Engineer (and any other individuals or entities identified in the Supplementary Conditions as additional insureds on Contractor's liability policies) on each Subcontractor's commercial general liability insurance policy; and

Copyright© 2018 National Society of Professional Engineers, American Council of Engineering Companies, and American Society of Civil Engineers. All rights reserved.

2. Suppliers to purchase and maintain insurance that is appropriate for their participation in the Project.

I. If either party does not purchase or maintain the insurance required of such party by the Contract, such party shall notify the other party in writing of such failure to purchase prior to the start of the Work, or of such failure to maintain prior to any change in the required coverage.

J. If Contractor has failed to obtain and maintain required insurance, Contractor's entitlement to enter or remain at the Site will end immediately, and Owner may impose an appropriate set-off against payment for any associated costs (including but not limited to the cost of purchasing necessary insurance coverage), and exercise Owner's termination rights under Article 16.

K. Without prejudice to any other right or remedy, if a party has failed to obtain required insurance, the other party may elect (but is in no way obligated) to obtain equivalent insurance to protect such other party's interests at the expense of the party who was required to provide such coverage, and the Contract Price will be adjusted accordingly.

L. Owner does not represent that insurance coverage and limits established in this Contract necessarily will be adequate to protect Contractor or Contractor's interests. Contractor is responsible for determining whether such coverage and limits are adequate to protect its interests, and for obtaining and maintaining any additional insurance that Contractor deems necessary.

M. The insurance and insurance limits required herein will not be deemed as a limitation on Contractor's liability, or that of its Subcontractors or Suppliers, under the indemnities granted to Owner and other individuals and entities in the Contract or otherwise.

N. All the policies of insurance required to be purchased and maintained under this Contract will contain a provision or endorsement that the coverage afforded will not be canceled, or renewal refused, until at least 10 days prior written notice has been given to the purchasing policyholder. Within three days of receipt of any such written notice, the purchasing policyholder shall provide a copy of the notice to each other insured and Engineer.

6.03 *Contractor's Insurance*

A. *Required Insurance*: Contractor shall purchase and maintain Worker's Compensation, Commercial General Liability, and other insurance pursuant to the specific requirements of the Supplementary Conditions.

B. *General Provisions*: The policies of insurance required by this Paragraph 6.03 as supplemented must:

1. include at least the specific coverages required;

2. be written for not less than the limits provided, or those required by Laws or Regulations, whichever is greater;

3. remain in effect at least until the Work is complete (as set forth in Paragraph 15.06.D), and longer if expressly required elsewhere in this Contract, and at all times thereafter when Contractor may be correcting, removing, or replacing defective Work as a warranty or correction obligation, or otherwise, or returning to the Site to conduct other tasks arising from the Contract;

Copyright© 2018 National Society of Professional Engineers, American Council of Engineering Companies, and American Society of Civil Engineers. All rights reserved.

4. apply with respect to the performance of the Work, whether such performance is by Contractor, any Subcontractor or Supplier, or by anyone directly or indirectly employed by any of them to perform any of the Work, or by anyone for whose acts any of them may be liable; and

5. include all necessary endorsements to support the stated requirements.

C. *Additional Insureds*: The Contractor's commercial general liability, automobile liability, employer's liability, umbrella or excess, pollution liability, and unmanned aerial vehicle liability policies, if required by this Contract, must:

1. include and list as additional insureds Owner and Engineer, and any individuals or entities identified as additional insureds in the Supplementary Conditions;

2. include coverage for the respective officers, directors, members, partners, employees, and consultants of all such additional insureds;

3. afford primary coverage to these additional insureds for all claims covered thereby (including as applicable those arising from both ongoing and completed operations);

4. not seek contribution from insurance maintained by the additional insured; and

5. as to commercial general liability insurance, apply to additional insureds with respect to liability caused in whole or in part by Contractor's acts or omissions, or the acts and omissions of those working on Contractor's behalf, in the performance of Contractor's operations.

6.04 *Builder's Risk and Other Property Insurance*

A. *Builder's Risk*: Unless otherwise provided in the Supplementary Conditions, Contractor shall purchase and maintain builder's risk insurance upon the Work on a completed value basis, in the amount of the Work's full insurable replacement cost (subject to such deductible amounts as may be provided in the Supplementary Conditions or required by Laws and Regulations). The specific requirements applicable to the builder's risk insurance are set forth in the Supplementary Conditions.

B. *Property Insurance for Facilities of Owner Where Work Will Occur*: Owner is responsible for obtaining and maintaining property insurance covering each existing structure, building, or facility in which any part of the Work will occur, or to which any part of the Work will attach or be adjoined. Such property insurance will be written on a special perils (all-risk) form, on a replacement cost basis, providing coverage consistent with that required for the builder's risk insurance, and will be maintained until the Work is complete, as set forth in Paragraph 15.06.D.

C. *Property Insurance for Substantially Complete Facilities*: Promptly after Substantial Completion, and before actual occupancy or use of the substantially completed Work, Owner will obtain property insurance for such substantially completed Work, and maintain such property insurance at least until the Work is complete, as set forth in Paragraph 15.06.D. Such property insurance will be written on a special perils (all-risk) form, on a replacement cost basis, and provide coverage consistent with that required for the builder's risk insurance. The builder's risk insurance may terminate upon written confirmation of Owner's procurement of such property insurance.

Copyright© 2018 National Society of Professional Engineers, American Council of Engineering Companies, and American Society of Civil Engineers. All rights reserved.

D. *Partial Occupancy or Use by Owner*: If Owner will occupy or use a portion or portions of the Work prior to Substantial Completion of all the Work, as provided in Paragraph 15.04, then Owner (directly, if it is the purchaser of the builder's risk policy, or through Contractor) will provide advance notice of such occupancy or use to the builder's risk insurer, and obtain an endorsement consenting to the continuation of coverage prior to commencing such partial occupancy or use.

E. *Insurance of Other Property; Additional Insurance*: If the express insurance provisions of the Contract do not require or address the insurance of a property item or interest, then the entity or individual owning such property item will be responsible for insuring it. If Contractor elects to obtain other special insurance to be included in or supplement the builder's risk or property insurance policies provided under this Paragraph 6.04, it may do so at Contractor's expense.

6.05 *Property Losses; Subrogation*

A. The builder's risk insurance policy purchased and maintained in accordance with Paragraph 6.04 (or an installation floater policy if authorized by the Supplementary Conditions), will contain provisions to the effect that in the event of payment of any loss or damage the insurer will have no rights of recovery against any insureds thereunder, or against Engineer or its consultants, or their officers, directors, members, partners, employees, agents, consultants, or subcontractors.

1. Owner and Contractor waive all rights against each other and the respective officers, directors, members, partners, employees, agents, consultants, and subcontractors of each and any of them, for all losses and damages caused by, arising out of, or resulting from any of the perils, risks, or causes of loss covered by such policies and any other property insurance applicable to the Work; and, in addition, waive all such rights against Engineer, its consultants, all individuals or entities identified in the Supplementary Conditions as builder's risk or installation floater insureds, and the officers, directors, members, partners, employees, agents, consultants, and subcontractors of each and any of them, under such policies for losses and damages so caused.

2. None of the above waivers extends to the rights that any party making such waiver may have to the proceeds of insurance held by Owner or Contractor as trustee or fiduciary, or otherwise payable under any policy so issued.

B. Any property insurance policy maintained by Owner covering any loss, damage, or consequential loss to Owner's existing structures, buildings, or facilities in which any part of the Work will occur, or to which any part of the Work will attach or adjoin; to adjacent structures, buildings, or facilities of Owner; or to part or all of the completed or substantially completed Work, during partial occupancy or use pursuant to Paragraph 15.04, after Substantial Completion pursuant to Paragraph 15.03, or after final payment pursuant to Paragraph 15.06, will contain provisions to the effect that in the event of payment of any loss or damage the insurer will have no rights of recovery against any insureds thereunder, or against Contractor, Subcontractors, or Engineer, or the officers, directors, members, partners, employees, agents, consultants, or subcontractors of each and any of them, and that the insured is allowed to waive the insurer's rights of subrogation in a written contract executed prior to the loss, damage, or consequential loss.

Copyright© 2018 National Society of Professional Engineers, American Council of Engineering Companies, and American Society of Civil Engineers. All rights reserved.

1. Owner waives all rights against Contractor, Subcontractors, and Engineer, and the officers, directors, members, partners, employees, agents, consultants and subcontractors of each and any of them, for all losses and damages caused by, arising out of, or resulting from fire or any of the perils, risks, or causes of loss covered by such policies.

C. The waivers in this Paragraph 6.05 include the waiver of rights due to business interruption, loss of use, or other consequential loss extending beyond direct physical loss or damage to Owner's property or the Work caused by, arising out of, or resulting from fire or other insured peril, risk, or cause of loss.

D. Contractor shall be responsible for assuring that each Subcontract contains provisions whereby the Subcontractor waives all rights against Owner, Contractor, all individuals or entities identified in the Supplementary Conditions as insureds, the Engineer and its consultants, and the officers, directors, members, partners, employees, agents, consultants, and subcontractors of each and any of them, for all losses and damages caused by, arising out of, relating to, or resulting from fire or other peril, risk, or cause of loss covered by builder's risk insurance, installation floater, and any other property insurance applicable to the Work.

6.06 *Receipt and Application of Property Insurance Proceeds*

A. Any insured loss under the builder's risk and other policies of property insurance required by Paragraph 6.04 will be adjusted and settled with the named insured that purchased the policy. Such named insured shall act as fiduciary for the other insureds, and give notice to such other insureds that adjustment and settlement of a claim is in progress. Any other insured may state its position regarding a claim for insured loss in writing within 15 days after notice of such claim.

B. Proceeds for such insured losses may be made payable by the insurer either jointly to multiple insureds, or to the named insured that purchased the policy in its own right and as fiduciary for other insureds, subject to the requirements of any applicable mortgage clause. A named insured receiving insurance proceeds under the builder's risk and other policies of insurance required by Paragraph 6.04 shall maintain such proceeds in a segregated account, and distribute such proceeds in accordance with such agreement as the parties in interest may reach, or as otherwise required under the dispute resolution provisions of this Contract or applicable Laws and Regulations.

C. If no other special agreement is reached, Contractor shall repair or replace the damaged Work, using allocated insurance proceeds.

ARTICLE 7—CONTRACTOR'S RESPONSIBILITIES

7.01 *Contractor's Means and Methods of Construction*

A. Contractor shall be solely responsible for the means, methods, techniques, sequences, and procedures of construction.

B. If the Contract Documents note, or Contractor determines, that professional engineering or other design services are needed to carry out Contractor's responsibilities for construction means, methods, techniques, sequences, and procedures, or for Site safety, then Contractor shall cause such services to be provided by a properly licensed design professional, at

Copyright© 2018 National Society of Professional Engineers, American Council of Engineering Companies, and American Society of Civil Engineers. All rights reserved.

Contractor's expense. Such services are not Owner-delegated professional design services under this Contract, and neither Owner nor Engineer has any responsibility with respect to (1) Contractor's determination of the need for such services, (2) the qualifications or licensing of the design professionals retained or employed by Contractor, (3) the performance of such services, or (4) any errors, omissions, or defects in such services.

7.02 *Supervision and Superintendence*

A. Contractor shall supervise, inspect, and direct the Work competently and efficiently, devoting such attention thereto and applying such skills and expertise as may be necessary to perform the Work in accordance with the Contract Documents.

B. At all times during the progress of the Work, Contractor shall assign a competent resident superintendent who will not be replaced without written notice to Owner and Engineer except under extraordinary circumstances.

7.03 *Labor; Working Hours*

A. Contractor shall provide competent, suitably qualified personnel to survey and lay out the Work and perform construction as required by the Contract Documents. Contractor shall maintain good discipline and order at the Site.

B. Contractor shall be fully responsible to Owner and Engineer for all acts and omissions of Contractor's employees; of Suppliers and Subcontractors, and their employees; and of any other individuals or entities performing or furnishing any of the Work, just as Contractor is responsible for Contractor's own acts and omissions.

C. Except as otherwise required for the safety or protection of persons or the Work or property at the Site or adjacent thereto, and except as otherwise stated in the Contract Documents, all Work at the Site will be performed during regular working hours, Monday through Friday. Contractor will not perform Work on a Saturday, Sunday, or any legal holiday. Contractor may perform Work outside regular working hours or on Saturdays, Sundays, or legal holidays only with Owner's written consent, which will not be unreasonably withheld.

7.04 *Services, Materials, and Equipment*

A. Unless otherwise specified in the Contract Documents, Contractor shall provide and assume full responsibility for all services, materials, equipment, labor, transportation, construction equipment and machinery, tools, appliances, fuel, power, light, heat, telephone, water, sanitary facilities, temporary facilities, and all other facilities and incidentals necessary for the performance, testing, start up, and completion of the Work, whether or not such items are specifically called for in the Contract Documents.

B. All materials and equipment incorporated into the Work must be new and of good quality, except as otherwise provided in the Contract Documents. All special warranties and guarantees required by the Specifications will expressly run to the benefit of Owner. If required by Engineer, Contractor shall furnish satisfactory evidence (including reports of required tests) as to the source, kind, and quality of materials and equipment.

C. All materials and equipment must be stored, applied, installed, connected, erected, protected, used, cleaned, and conditioned in accordance with instructions of the applicable Supplier, except as otherwise may be provided in the Contract Documents.

Copyright© 2018 National Society of Professional Engineers, American Council of Engineering Companies, and American Society of Civil Engineers. All rights reserved.

7.05 *"Or Equals"*

A. *Contractor's Request; Governing Criteria*: Whenever an item of equipment or material is specified or described in the Contract Documents by using the names of one or more proprietary items or specific Suppliers, the Contract Price has been based upon Contractor furnishing such item as specified. The specification or description of such an item is intended to establish the type, function, appearance, and quality required. Unless the specification or description contains or is followed by words reading that no like, equivalent, or "or equal" item is permitted, Contractor may request that Engineer authorize the use of other items of equipment or material, or items from other proposed Suppliers, under the circumstances described below.

1. If Engineer in its sole discretion determines that an item of equipment or material proposed by Contractor is functionally equal to that named and sufficiently similar so that no change in related Work will be required, Engineer will deem it an "or equal" item. For the purposes of this paragraph, a proposed item of equipment or material will be considered functionally equal to an item so named if:

   a. in the exercise of reasonable judgment Engineer determines that the proposed item:

      1) is at least equal in materials of construction, quality, durability, appearance, strength, and design characteristics;

      2) will reliably perform at least equally well the function and achieve the results imposed by the design concept of the completed Project as a functioning whole;

      3) has a proven record of performance and availability of responsive service; and

      4) is not objectionable to Owner.

   b. Contractor certifies that, if the proposed item is approved and incorporated into the Work:

      1) there will be no increase in cost to the Owner or increase in Contract Times; and

      2) the item will conform substantially to the detailed requirements of the item named in the Contract Documents.

B. *Contractor's Expense*: Contractor shall provide all data in support of any proposed "or equal" item at Contractor's expense.

C. *Engineer's Evaluation and Determination*: Engineer will be allowed a reasonable time to evaluate each "or-equal" request. Engineer may require Contractor to furnish additional data about the proposed "or-equal" item. Engineer will be the sole judge of acceptability. No "or-equal" item will be ordered, furnished, installed, or utilized until Engineer's review is complete and Engineer determines that the proposed item is an "or-equal," which will be evidenced by an approved Shop Drawing or other written communication. Engineer will advise Contractor in writing of any negative determination.

D. *Effect of Engineer's Determination*: Neither approval nor denial of an "or-equal" request will result in any change in Contract Price. The Engineer's denial of an "or-equal" request will be final and binding, and may not be reversed through an appeal under any provision of the Contract.

Copyright© 2018 National Society of Professional Engineers, American Council of Engineering Companies, and American Society of Civil Engineers. All rights reserved.

E. *Treatment as a Substitution Request*: If Engineer determines that an item of equipment or material proposed by Contractor does not qualify as an "or-equal" item, Contractor may request that Engineer consider the item a proposed substitute pursuant to Paragraph 7.06.

7.06 *Substitutes*

A. *Contractor's Request; Governing Criteria*: Unless the specification or description of an item of equipment or material required to be furnished under the Contract Documents contains or is followed by words reading that no substitution is permitted, Contractor may request that Engineer authorize the use of other items of equipment or material under the circumstances described below. To the extent possible such requests must be made before commencement of related construction at the Site.

1. Contractor shall submit sufficient information as provided below to allow Engineer to determine if the item of material or equipment proposed is functionally equivalent to that named and an acceptable substitute therefor. Engineer will not accept requests for review of proposed substitute items of equipment or material from anyone other than Contractor.

2. The requirements for review by Engineer will be as set forth in Paragraph 7.06.B, as supplemented by the Specifications, and as Engineer may decide is appropriate under the circumstances.

3. Contractor shall make written application to Engineer for review of a proposed substitute item of equipment or material that Contractor seeks to furnish or use. The application:

a. will certify that the proposed substitute item will:

1) perform adequately the functions and achieve the results called for by the general design;

2) be similar in substance to the item specified; and

3) be suited to the same use as the item specified.

b. will state:

1) the extent, if any, to which the use of the proposed substitute item will necessitate a change in Contract Times;

2) whether use of the proposed substitute item in the Work will require a change in any of the Contract Documents (or in the provisions of any other direct contract with Owner for other work on the Project) to adapt the design to the proposed substitute item; and

3) whether incorporation or use of the proposed substitute item in connection with the Work is subject to payment of any license fee or royalty.

c. will identify:

1) all variations of the proposed substitute item from the item specified; and

2) available engineering, sales, maintenance, repair, and replacement services.

d. will contain an itemized estimate of all costs or credits that will result directly or indirectly from use of such substitute item, including but not limited to changes in

Copyright© 2018 National Society of Professional Engineers, American Council of Engineering Companies, and American Society of Civil Engineers. All rights reserved.

Contract Price, shared savings, costs of redesign, and claims of other contractors affected by any resulting change.

B. *Engineer's Evaluation and Determination*: Engineer will be allowed a reasonable time to evaluate each substitute request, and to obtain comments and direction from Owner. Engineer may require Contractor to furnish additional data about the proposed substitute item. Engineer will be the sole judge of acceptability. No substitute will be ordered, furnished, installed, or utilized until Engineer's review is complete and Engineer determines that the proposed item is an acceptable substitute. Engineer's determination will be evidenced by a Field Order or a proposed Change Order accounting for the substitution itself and all related impacts, including changes in Contract Price or Contract Times. Engineer will advise Contractor in writing of any negative determination.

C. *Special Guarantee*: Owner may require Contractor to furnish at Contractor's expense a special performance guarantee or other surety with respect to any substitute.

D. *Reimbursement of Engineer's Cost*: Engineer will record Engineer's costs in evaluating a substitute proposed or submitted by Contractor. Whether or not Engineer approves a substitute so proposed or submitted by Contractor, Contractor shall reimburse Owner for the reasonable charges of Engineer for evaluating each such proposed substitute. Contractor shall also reimburse Owner for the reasonable charges of Engineer for making changes in the Contract Documents (or in the provisions of any other direct contract with Owner) resulting from the acceptance of each proposed substitute.

E. *Contractor's Expense*: Contractor shall provide all data in support of any proposed substitute at Contractor's expense.

F. *Effect of Engineer's Determination*: If Engineer approves the substitution request, Contractor shall execute the proposed Change Order and proceed with the substitution. The Engineer's denial of a substitution request will be final and binding, and may not be reversed through an appeal under any provision of the Contract. Contractor may challenge the scope of reimbursement costs imposed under Paragraph 7.06.D, by timely submittal of a Change Proposal.

7.07 *Concerning Subcontractors and Suppliers*

A. Contractor may retain Subcontractors and Suppliers for the performance of parts of the Work. Such Subcontractors and Suppliers must be acceptable to Owner. The Contractor's retention of a Subcontractor or Supplier for the performance of parts of the Work will not relieve Contractor's obligation to Owner to perform and complete the Work in accordance with the Contract Documents.

B. Contractor shall retain specific Subcontractors and Suppliers for the performance of designated parts of the Work if required by the Contract to do so.

C. Subsequent to the submittal of Contractor's Bid or final negotiation of the terms of the Contract, Owner may not require Contractor to retain any Subcontractor or Supplier to furnish or perform any of the Work against which Contractor has reasonable objection.

D. Prior to entry into any binding subcontract or purchase order, Contractor shall submit to Owner the identity of the proposed Subcontractor or Supplier (unless Owner has already deemed such proposed Subcontractor or Supplier acceptable during the bidding process or

Copyright© 2018 National Society of Professional Engineers, American Council of Engineering Companies, and American Society of Civil Engineers. All rights reserved.

otherwise). Such proposed Subcontractor or Supplier shall be deemed acceptable to Owner unless Owner raises a substantive, reasonable objection within 5 days.

E. Owner may require the replacement of any Subcontractor or Supplier. Owner also may require Contractor to retain specific replacements; provided, however, that Owner may not require a replacement to which Contractor has a reasonable objection. If Contractor has submitted the identity of certain Subcontractors or Suppliers for acceptance by Owner, and Owner has accepted it (either in writing or by failing to make written objection thereto), then Owner may subsequently revoke the acceptance of any such Subcontractor or Supplier so identified solely on the basis of substantive, reasonable objection after due investigation. Contractor shall submit an acceptable replacement for the rejected Subcontractor or Supplier.

F. If Owner requires the replacement of any Subcontractor or Supplier retained by Contractor to perform any part of the Work, then Contractor shall be entitled to an adjustment in Contract Price or Contract Times, with respect to the replacement; and Contractor shall initiate a Change Proposal for such adjustment within 30 days of Owner's requirement of replacement.

G. No acceptance by Owner of any such Subcontractor or Supplier, whether initially or as a replacement, will constitute a waiver of the right of Owner to the completion of the Work in accordance with the Contract Documents.

H. On a monthly basis, Contractor shall submit to Engineer a complete list of all Subcontractors and Suppliers having a direct contract with Contractor, and of all other Subcontractors and Suppliers known to Contractor at the time of submittal.

I. Contractor shall be solely responsible for scheduling and coordinating the work of Subcontractors and Suppliers.

J. The divisions and sections of the Specifications and the identifications of any Drawings do not control Contractor in dividing the Work among Subcontractors or Suppliers, or in delineating the Work to be performed by any specific trade.

K. All Work performed for Contractor by a Subcontractor or Supplier must be pursuant to an appropriate contractual agreement that specifically binds the Subcontractor or Supplier to the applicable terms and conditions of the Contract for the benefit of Owner and Engineer.

L. Owner may furnish to any Subcontractor or Supplier, to the extent practicable, information about amounts paid to Contractor for Work performed for Contractor by the Subcontractor or Supplier.

M. Contractor shall restrict all Subcontractors and Suppliers from communicating with Engineer or Owner, except through Contractor or in case of an emergency, or as otherwise expressly allowed in this Contract.

7.08 *Patent Fees and Royalties*

A. Contractor shall pay all license fees and royalties and assume all costs incident to the use in the performance of the Work or the incorporation in the Work of any invention, design, process, product, or device which is the subject of patent rights or copyrights held by others. If an invention, design, process, product, or device is specified in the Contract Documents for use in the performance of the Work and if, to the actual knowledge of Owner or Engineer, its use is subject to patent rights or copyrights calling for the payment of any

Copyright© 2018 National Society of Professional Engineers, American Council of Engineering Companies, and American Society of Civil Engineers. All rights reserved.

license fee or royalty to others, the existence of such rights will be disclosed in the Contract Documents.

B. To the fullest extent permitted by Laws and Regulations, Owner shall indemnify and hold harmless Contractor, and its officers, directors, members, partners, employees, agents, consultants, and subcontractors, from and against all claims, costs, losses, and damages (including but not limited to all fees and charges of engineers, architects, attorneys, and other professionals, and all court or arbitration or other dispute resolution costs) arising out of or relating to any infringement of patent rights or copyrights incident to the use in the performance of the Work or resulting from the incorporation in the Work of any invention, design, process, product, or device specified in the Contract Documents, but not identified as being subject to payment of any license fee or royalty to others required by patent rights or copyrights.

C. To the fullest extent permitted by Laws and Regulations, Contractor shall indemnify and hold harmless Owner and Engineer, and the officers, directors, members, partners, employees, agents, consultants and subcontractors of each and any of them, from and against all claims, costs, losses, and damages (including but not limited to all fees and charges of engineers, architects, attorneys, and other professionals and all court or arbitration or other dispute resolution costs) arising out of or relating to any infringement of patent rights or copyrights incident to the use in the performance of the Work or resulting from the incorporation in the Work of any invention, design, process, product, or device not specified in the Contract Documents.

7.09 *Permits*

A. Unless otherwise provided in the Contract Documents, Contractor shall obtain and pay for all construction permits, licenses, and certificates of occupancy. Owner shall assist Contractor, when necessary, in obtaining such permits and licenses. Contractor shall pay all governmental charges and inspection fees necessary for the prosecution of the Work which are applicable at the time of the submission of Contractor's Bid (or when Contractor became bound under a negotiated contract). Owner shall pay all charges of utility owners for connections for providing permanent service to the Work.

7.10 *Taxes*

A. Contractor shall pay all sales, consumer, use, and other similar taxes required to be paid by Contractor in accordance with the Laws and Regulations of the place of the Project which are applicable during the performance of the Work.

7.11 *Laws and Regulations*

A. Contractor shall give all notices required by and shall comply with all Laws and Regulations applicable to the performance of the Work. Neither Owner nor Engineer shall be responsible for monitoring Contractor's compliance with any Laws or Regulations.

B. If Contractor performs any Work or takes any other action knowing or having reason to know that it is contrary to Laws or Regulations, Contractor shall bear all resulting costs and losses, and shall indemnify and hold harmless Owner and Engineer, and the officers, directors, members, partners, employees, agents, consultants, and subcontractors of each and any of them, from and against all claims, costs, losses, and damages (including but not limited to all fees and charges of engineers, architects, attorneys, and other professionals and all court or arbitration or other dispute resolution costs) arising out of or relating to

Copyright© 2018 National Society of Professional Engineers, American Council of Engineering Companies, and American Society of Civil Engineers. All rights reserved.

such Work or other action. It is not Contractor's responsibility to make certain that the Work described in the Contract Documents is in accordance with Laws and Regulations, but this does not relieve Contractor of its obligations under Paragraph 3.03.

C. Owner or Contractor may give written notice to the other party of any changes after the submission of Contractor's Bid (or after the date when Contractor became bound under a negotiated contract) in Laws or Regulations having an effect on the cost or time of performance of the Work, including but not limited to changes in Laws or Regulations having an effect on procuring permits and on sales, use, value-added, consumption, and other similar taxes. If Owner and Contractor are unable to agree on entitlement to or on the amount or extent, if any, of any adjustment in Contract Price or Contract Times resulting from such changes, then within 30 days of such written notice Contractor may submit a Change Proposal, or Owner may initiate a Claim.

7.12 *Record Documents*

A. Contractor shall maintain in a safe place at the Site one printed record copy of all Drawings, Specifications, Addenda, Change Orders, Work Change Directives, Field Orders, written interpretations and clarifications, and approved Shop Drawings. Contractor shall keep such record documents in good order and annotate them to show changes made during construction. These record documents, together with all approved Samples, will be available to Engineer for reference. Upon completion of the Work, Contractor shall deliver these record documents to Engineer.

7.13 *Safety and Protection*

A. Contractor shall be solely responsible for initiating, maintaining, and supervising all safety precautions and programs in connection with the Work. Such responsibility does not relieve Subcontractors of their responsibility for the safety of persons or property in the performance of their work, nor for compliance with applicable safety Laws and Regulations.

B. Contractor shall designate a qualified and experienced safety representative whose duties and responsibilities are the prevention of Work-related accidents and the maintenance and supervision of safety precautions and programs.

C. Contractor shall take all necessary precautions for the safety of, and shall provide the necessary protection to prevent damage, injury, or loss to:

1. all persons on the Site or who may be affected by the Work;

2. all the Work and materials and equipment to be incorporated therein, whether in storage on or off the Site; and

3. other property at the Site or adjacent thereto, including trees, shrubs, lawns, walks, pavements, roadways, structures, other work in progress, utilities, and Underground Facilities not designated for removal, relocation, or replacement in the course of construction.

D. All damage, injury, or loss to any property referred to in Paragraph 7.13.C.2 or 7.13.C.3 caused, directly or indirectly, in whole or in part, by Contractor, any Subcontractor, Supplier, or any other individual or entity directly or indirectly employed by any of them to perform any of the Work, or anyone for whose acts any of them may be liable, shall be remedied by Contractor at its expense (except damage or loss attributable to the fault of Drawings or Specifications or to the acts or omissions of Owner or Engineer or anyone employed by any

Copyright© 2018 National Society of Professional Engineers, American Council of Engineering Companies, and American Society of Civil Engineers. All rights reserved.

of them, or anyone for whose acts any of them may be liable, and not attributable, directly or indirectly, in whole or in part, to the fault or negligence of Contractor or any Subcontractor, Supplier, or other individual or entity directly or indirectly employed by any of them).

E. Contractor shall comply with all applicable Laws and Regulations relating to the safety of persons or property, or to the protection of persons or property from damage, injury, or loss; and shall erect and maintain all necessary safeguards for such safety and protection.

F. Contractor shall notify Owner; the owners of adjacent property; the owners of Underground Facilities and other utilities (if the identity of such owners is known to Contractor); and other contractors and utility owners performing work at or adjacent to the Site, in writing, when Contractor knows that prosecution of the Work may affect them, and shall cooperate with them in the protection, removal, relocation, and replacement of their property or work in progress.

G. Contractor shall comply with the applicable requirements of Owner's safety programs, if any. Any Owner's safety programs that are applicable to the Work are identified or included in the Supplementary Conditions or Specifications.

H. Contractor shall inform Owner and Engineer of the specific requirements of Contractor's safety program with which Owner's and Engineer's employees and representatives must comply while at the Site.

I. Contractor's duties and responsibilities for safety and protection will continue until all the Work is completed, Engineer has issued a written notice to Owner and Contractor in accordance with Paragraph 15.06.C that the Work is acceptable, and Contractor has left the Site (except as otherwise expressly provided in connection with Substantial Completion).

J. Contractor's duties and responsibilities for safety and protection will resume whenever Contractor or any Subcontractor or Supplier returns to the Site to fulfill warranty or correction obligations, or to conduct other tasks arising from the Contract Documents.

7.14 *Hazard Communication Programs*

A. Contractor shall be responsible for coordinating any exchange of safety data sheets (formerly known as material safety data sheets) or other hazard communication information required to be made available to or exchanged between or among employers at the Site in accordance with Laws or Regulations.

7.15 *Emergencies*

A. In emergencies affecting the safety or protection of persons or the Work or property at the Site or adjacent thereto, Contractor is obligated to act to prevent damage, injury, or loss. Contractor shall give Engineer prompt written notice if Contractor believes that any significant changes in the Work or variations from the Contract Documents have been caused by an emergency, or are required as a result of Contractor's response to an emergency. If Engineer determines that a change in the Contract Documents is required because of an emergency or Contractor's response, a Work Change Directive or Change Order will be issued.

Copyright© 2018 National Society of Professional Engineers, American Council of Engineering Companies, and American Society of Civil Engineers. All rights reserved.

7.16 *Submittals*

A. *Shop Drawing and Sample Requirements*

1. Before submitting a Shop Drawing or Sample, Contractor shall:

   a. review and coordinate the Shop Drawing or Sample with other Shop Drawings and Samples and with the requirements of the Work and the Contract Documents;

   b. determine and verify:

      1) all field measurements, quantities, dimensions, specified performance and design criteria, installation requirements, materials, catalog numbers, and similar information with respect to the Submittal;

      2) the suitability of all materials and equipment offered with respect to the indicated application, fabrication, shipping, handling, storage, assembly, and installation pertaining to the performance of the Work; and

      3) all information relative to Contractor's responsibilities for means, methods, techniques, sequences, and procedures of construction, and safety precautions and programs incident thereto;

   c. confirm that the Submittal is complete with respect to all related data included in the Submittal.

2. Each Shop Drawing or Sample must bear a stamp or specific written certification that Contractor has satisfied Contractor's obligations under the Contract Documents with respect to Contractor's review of that Submittal, and that Contractor approves the Submittal.

3. With each Shop Drawing or Sample, Contractor shall give Engineer specific written notice of any variations that the Submittal may have from the requirements of the Contract Documents. This notice must be set forth in a written communication separate from the Submittal; and, in addition, in the case of a Shop Drawing by a specific notation made on the Shop Drawing itself.

B. *Submittal Procedures for Shop Drawings and Samples*: Contractor shall label and submit Shop Drawings and Samples to Engineer for review and approval in accordance with the accepted Schedule of Submittals.

1. *Shop Drawings*

   a. Contractor shall submit the number of copies required in the Specifications.

   b. Data shown on the Shop Drawings must be complete with respect to quantities, dimensions, specified performance and design criteria, materials, and similar data to show Engineer the services, materials, and equipment Contractor proposes to provide, and to enable Engineer to review the information for the limited purposes required by Paragraph 7.16.C.

2. *Samples*

   a. Contractor shall submit the number of Samples required in the Specifications.

   b. Contractor shall clearly identify each Sample as to material, Supplier, pertinent data such as catalog numbers, the use for which intended and other data as Engineer

Copyright© 2018 National Society of Professional Engineers, American Council of Engineering Companies, and American Society of Civil Engineers. All rights reserved.

may require to enable Engineer to review the Submittal for the limited purposes required by Paragraph 7.16.C.

3. Where a Shop Drawing or Sample is required by the Contract Documents or the Schedule of Submittals, any related Work performed prior to Engineer's review and approval of the pertinent submittal will be at the sole expense and responsibility of Contractor.

C. *Engineer's Review of Shop Drawings and Samples*

1. Engineer will provide timely review of Shop Drawings and Samples in accordance with the accepted Schedule of Submittals. Engineer's review and approval will be only to determine if the items covered by the Submittals will, after installation or incorporation in the Work, comply with the requirements of the Contract Documents, and be compatible with the design concept of the completed Project as a functioning whole as indicated by the Contract Documents.

2. Engineer's review and approval will not extend to means, methods, techniques, sequences, or procedures of construction, or to safety precautions or programs incident thereto.

3. Engineer's review and approval of a separate item as such will not indicate approval of the assembly in which the item functions.

4. Engineer's review and approval of a Shop Drawing or Sample will not relieve Contractor from responsibility for any variation from the requirements of the Contract Documents unless Contractor has complied with the requirements of Paragraph 7.16.A.3 and Engineer has given written approval of each such variation by specific written notation thereof incorporated in or accompanying the Shop Drawing or Sample. Engineer will document any such approved variation from the requirements of the Contract Documents in a Field Order or other appropriate Contract modification.

5. Engineer's review and approval of a Shop Drawing or Sample will not relieve Contractor from responsibility for complying with the requirements of Paragraphs 7.16.A and B.

6. Engineer's review and approval of a Shop Drawing or Sample, or of a variation from the requirements of the Contract Documents, will not, under any circumstances, change the Contract Times or Contract Price, unless such changes are included in a Change Order.

7. Neither Engineer's receipt, review, acceptance, or approval of a Shop Drawing or Sample will result in such item becoming a Contract Document.

8. Contractor shall perform the Work in compliance with the requirements and commitments set forth in approved Shop Drawings and Samples, subject to the provisions of Paragraph 7.16.C.4.

D. *Resubmittal Procedures for Shop Drawings and Samples*

1. Contractor shall make corrections required by Engineer and shall return the required number of corrected copies of Shop Drawings and submit, as required, new Samples for review and approval. Contractor shall direct specific attention in writing to revisions other than the corrections called for by Engineer on previous Submittals.

2. Contractor shall furnish required Shop Drawing and Sample submittals with sufficient information and accuracy to obtain required approval of an item with no more than two

Copyright© 2018 National Society of Professional Engineers, American Council of Engineering Companies, and American Society of Civil Engineers. All rights reserved.

resubmittals. Engineer will record Engineer's time for reviewing a third or subsequent resubmittal of a Shop Drawing or Sample, and Contractor shall be responsible for Engineer's charges to Owner for such time. Owner may impose a set-off against payments due Contractor to secure reimbursement for such charges.

3. If Contractor requests a change of a previously approved Shop Drawing or Sample, Contractor shall be responsible for Engineer's charges to Owner for its review time, and Owner may impose a set-off against payments due Contractor to secure reimbursement for such charges, unless the need for such change is beyond the control of Contractor.

E. *Submittals Other than Shop Drawings, Samples, and Owner-Delegated Designs*

1. The following provisions apply to all Submittals other than Shop Drawings, Samples, and Owner-delegated designs:

   a. Contractor shall submit all such Submittals to the Engineer in accordance with the Schedule of Submittals and pursuant to the applicable terms of the Contract Documents.

   b. Engineer will provide timely review of all such Submittals in accordance with the Schedule of Submittals and return such Submittals with a notation of either Accepted or Not Accepted. Any such Submittal that is not returned within the time established in the Schedule of Submittals will be deemed accepted.

   c. Engineer's review will be only to determine if the Submittal is acceptable under the requirements of the Contract Documents as to general form and content of the Submittal.

   d. If any such Submittal is not accepted, Contractor shall confer with Engineer regarding the reason for the non-acceptance, and resubmit an acceptable document.

2. Procedures for the submittal and acceptance of the Progress Schedule, the Schedule of Submittals, and the Schedule of Values are set forth in Paragraphs 2.03. 2.04, and 2.05.

F. Owner-delegated Designs: Submittals pursuant to Owner-delegated designs are governed by the provisions of Paragraph 7.19.

7.17 *Contractor's General Warranty and Guarantee*

A. Contractor warrants and guarantees to Owner that all Work will be in accordance with the Contract Documents and will not be defective. Engineer is entitled to rely on Contractor's warranty and guarantee.

B. Owner's rights under this warranty and guarantee are in addition to, and are not limited by, Owner's rights under the correction period provisions of Paragraph 15.08. The time in which Owner may enforce its warranty and guarantee rights under this Paragraph 7.17 is limited only by applicable Laws and Regulations restricting actions to enforce such rights; provided, however, that after the end of the correction period under Paragraph 15.08:

1. Owner shall give Contractor written notice of any defective Work within 60 days of the discovery that such Work is defective; and

Copyright© 2018 National Society of Professional Engineers, American Council of Engineering Companies, and American Society of Civil Engineers. All rights reserved.

2. Such notice will be deemed the start of an event giving rise to a Claim under Paragraph 12.01.B, such that any related Claim must be brought within 30 days of the notice.

C. Contractor's warranty and guarantee hereunder excludes defects or damage caused by:

1. abuse, or improper modification, maintenance, or operation, by persons other than Contractor, Subcontractors, Suppliers, or any other individual or entity for whom Contractor is responsible; or

2. normal wear and tear under normal usage.

D. Contractor's obligation to perform and complete the Work in accordance with the Contract Documents is absolute. None of the following will constitute an acceptance of Work that is not in accordance with the Contract Documents, a release of Contractor's obligation to perform the Work in accordance with the Contract Documents, or a release of Owner's warranty and guarantee rights under this Paragraph 7.17:

1. Observations by Engineer;

2. Recommendation by Engineer or payment by Owner of any progress or final payment;

3. The issuance of a certificate of Substantial Completion by Engineer or any payment related thereto by Owner;

4. Use or occupancy of the Work or any part thereof by Owner;

5. Any review and approval of a Shop Drawing or Sample submittal;

6. The issuance of a notice of acceptability by Engineer;

7. The end of the correction period established in Paragraph 15.08;

8. Any inspection, test, or approval by others; or

9. Any correction of defective Work by Owner.

E. If the Contract requires the Contractor to accept the assignment of a contract entered into by Owner, then the specific warranties, guarantees, and correction obligations contained in the assigned contract will govern with respect to Contractor's performance obligations to Owner for the Work described in the assigned contract.

7.18 *Indemnification*

A. To the fullest extent permitted by Laws and Regulations, and in addition to any other obligations of Contractor under the Contract or otherwise, Contractor shall indemnify and hold harmless Owner and Engineer, and the officers, directors, members, partners, employees, agents, consultants and subcontractors of each and any of them, from losses, damages, costs, and judgments (including but not limited to all fees and charges of engineers, architects, attorneys, and other professionals, and all court or arbitration or other dispute resolution costs) arising from third-party claims or actions relating to or resulting from the performance or furnishing of the Work, provided that any such claim, action, loss, cost, judgment or damage is attributable to bodily injury, sickness, disease, or death, or to damage to or destruction of tangible property (other than the Work itself), including the loss of use resulting therefrom, but only to the extent caused by any negligent act or omission of Contractor, any Subcontractor, any Supplier, or any individual or entity

Copyright© 2018 National Society of Professional Engineers, American Council of Engineering Companies, and American Society of Civil Engineers. All rights reserved.

directly or indirectly employed by any of them to perform any of the Work, or anyone for whose acts any of them may be liable.

B. In any and all claims against Owner or Engineer, or any of their officers, directors, members, partners, employees, agents, consultants, or subcontractors, by any employee (or the survivor or personal representative of such employee) of Contractor, any Subcontractor, any Supplier, or any individual or entity directly or indirectly employed by any of them to perform any of the Work, or anyone for whose acts any of them may be liable, the indemnification obligation under Paragraph 7.18.A will not be limited in any way by any limitation on the amount or type of damages, compensation, or benefits payable by or for Contractor or any such Subcontractor, Supplier, or other individual or entity under workers' compensation acts, disability benefit acts, or other employee benefit acts.

7.19 *Delegation of Professional Design Services*

A. Owner may require Contractor to provide professional design services for a portion of the Work by express delegation in the Contract Documents. Such delegation will specify the performance and design criteria that such services must satisfy, and the Submittals that Contractor must furnish to Engineer with respect to the Owner-delegated design.

B. Contractor shall cause such Owner-delegated professional design services to be provided pursuant to the professional standard of care by a properly licensed design professional, whose signature and seal must appear on all drawings, calculations, specifications, certifications, and Submittals prepared by such design professional. Such design professional must issue all certifications of design required by Laws and Regulations.

C. If a Shop Drawing or other Submittal related to the Owner-delegated design is prepared by Contractor, a Subcontractor, or others for submittal to Engineer, then such Shop Drawing or other Submittal must bear the written approval of Contractor's design professional when submitted by Contractor to Engineer.

D. Owner and Engineer shall be entitled to rely upon the adequacy, accuracy, and completeness of the services, certifications, and approvals performed or provided by the design professionals retained or employed by Contractor under an Owner-delegated design, subject to the professional standard of care and the performance and design criteria stated in the Contract Documents.

E. Pursuant to this Paragraph 7.19, Engineer's review, approval, and other determinations regarding design drawings, calculations, specifications, certifications, and other Submittals furnished by Contractor pursuant to an Owner-delegated design will be only for the following limited purposes:

1. Checking for conformance with the requirements of this Paragraph 7.19;

2. Confirming that Contractor (through its design professionals) has used the performance and design criteria specified in the Contract Documents; and

3. Establishing that the design furnished by Contractor is consistent with the design concept expressed in the Contract Documents.

F. Contractor shall not be responsible for the adequacy of performance or design criteria specified by Owner or Engineer.

Copyright© 2018 National Society of Professional Engineers, American Council of Engineering Companies, and American Society of Civil Engineers. All rights reserved.

G. Contractor is not required to provide professional services in violation of applicable Laws and Regulations.

ARTICLE 8—OTHER WORK AT THE SITE

8.01 *Other Work*

A. In addition to and apart from the Work under the Contract Documents, the Owner may perform other work at or adjacent to the Site. Such other work may be performed by Owner's employees, or through contracts between the Owner and third parties. Owner may also arrange to have third-party utility owners perform work on their utilities and facilities at or adjacent to the Site.

B. If Owner performs other work at or adjacent to the Site with Owner's employees, or through contracts for such other work, then Owner shall give Contractor written notice thereof prior to starting any such other work. If Owner has advance information regarding the start of any third-party utility work that Owner has arranged to take place at or adjacent to the Site, Owner shall provide such information to Contractor.

C. Contractor shall afford proper and safe access to the Site to each contractor that performs such other work, each utility owner performing other work, and Owner, if Owner is performing other work with Owner's employees, and provide a reasonable opportunity for the introduction and storage of materials and equipment and the execution of such other work.

D. Contractor shall do all cutting, fitting, and patching of the Work that may be required to properly connect or otherwise make its several parts come together and properly integrate with such other work. Contractor shall not endanger any work of others by cutting, excavating, or otherwise altering such work; provided, however, that Contractor may cut or alter others' work with the written consent of Engineer and the others whose work will be affected.

E. If the proper execution or results of any part of Contractor's Work depends upon work performed by others, Contractor shall inspect such other work and promptly report to Engineer in writing any delays, defects, or deficiencies in such other work that render it unavailable or unsuitable for the proper execution and results of Contractor's Work. Contractor's failure to so report will constitute an acceptance of such other work as fit and proper for integration with Contractor's Work except for latent defects and deficiencies in such other work.

F. The provisions of this article are not applicable to work that is performed by third-party utilities or other third-party entities without a contract with Owner, or that is performed without having been arranged by Owner. If such work occurs, then any related delay, disruption, or interference incurred by Contractor is governed by the provisions of Paragraph 4.05.C.3.

8.02 *Coordination*

A. If Owner intends to contract with others for the performance of other work at or adjacent to the Site, to perform other work at or adjacent to the Site with Owner's employees, or to arrange to have utility owners perform work at or adjacent to the Site, the following will be

Copyright© 2018 National Society of Professional Engineers, American Council of Engineering Companies, and American Society of Civil Engineers. All rights reserved.

set forth in the Supplementary Conditions or provided to Contractor prior to the start of any such other work:

1. The identity of the individual or entity that will have authority and responsibility for coordination of the activities among the various contractors;
2. An itemization of the specific matters to be covered by such authority and responsibility; and
3. The extent of such authority and responsibilities.

B. Unless otherwise provided in the Supplementary Conditions, Owner shall have sole authority and responsibility for such coordination.

8.03 *Legal Relationships*

A. If, in the course of performing other work for Owner at or adjacent to the Site, the Owner's employees, any other contractor working for Owner, or any utility owner that Owner has arranged to perform work, causes damage to the Work or to the property of Contractor or its Subcontractors, or delays, disrupts, interferes with, or increases the scope or cost of the performance of the Work, through actions or inaction, then Contractor shall be entitled to an equitable adjustment in the Contract Price or the Contract Times. Contractor must submit any Change Proposal seeking an equitable adjustment in the Contract Price or the Contract Times under this paragraph within 30 days of the damaging, delaying, disrupting, or interfering event. The entitlement to, and extent of, any such equitable adjustment will take into account information (if any) regarding such other work that was provided to Contractor in the Contract Documents prior to the submittal of the Bid or the final negotiation of the terms of the Contract, and any remedies available to Contractor under Laws or Regulations concerning utility action or inaction. When applicable, any such equitable adjustment in Contract Price will be conditioned on Contractor assigning to Owner all Contractor's rights against such other contractor or utility owner with respect to the damage, delay, disruption, or interference that is the subject of the adjustment. Contractor's entitlement to an adjustment of the Contract Times or Contract Price is subject to the provisions of Paragraphs 4.05.D and 4.05.E.

B. Contractor shall take reasonable and customary measures to avoid damaging, delaying, disrupting, or interfering with the work of Owner, any other contractor, or any utility owner performing other work at or adjacent to the Site.

1. If Contractor fails to take such measures and as a result damages, delays, disrupts, or interferes with the work of any such other contractor or utility owner, then Owner may impose a set-off against payments due Contractor, and assign to such other contractor or utility owner the Owner's contractual rights against Contractor with respect to the breach of the obligations set forth in this Paragraph 8.03.B.
2. When Owner is performing other work at or adjacent to the Site with Owner's employees, Contractor shall be liable to Owner for damage to such other work, and for the reasonable direct delay, disruption, and interference costs incurred by Owner as a result of Contractor's failure to take reasonable and customary measures with respect to Owner's other work. In response to such damage, delay, disruption, or interference, Owner may impose a set-off against payments due Contractor.

Copyright© 2018 National Society of Professional Engineers, American Council of Engineering Companies, and American Society of Civil Engineers. All rights reserved.

C. If Contractor damages, delays, disrupts, or interferes with the work of any other contractor, or any utility owner performing other work at or adjacent to the Site, through Contractor's failure to take reasonable and customary measures to avoid such impacts, or if any claim arising out of Contractor's actions, inactions, or negligence in performance of the Work at or adjacent to the Site is made by any such other contractor or utility owner against Contractor, Owner, or Engineer, then Contractor shall (1) promptly attempt to settle the claim as to all parties through negotiations with such other contractor or utility owner, or otherwise resolve the claim by arbitration or other dispute resolution proceeding or at law, and (2) indemnify and hold harmless Owner and Engineer, and the officers, directors, members, partners, employees, agents, consultants and subcontractors of each and any of them from and against any such claims, and against all costs, losses, and damages (including but not limited to all fees and charges of engineers, architects, attorneys, and other professionals and all court or arbitration or other dispute resolution costs) arising out of or relating to such damage, delay, disruption, or interference.

ARTICLE 9—OWNER'S RESPONSIBILITIES

9.01 *Communications to Contractor*

A. Except as otherwise provided in these General Conditions, Owner shall issue all communications to Contractor through Engineer.

9.02 *Replacement of Engineer*

A. Owner may at its discretion appoint an engineer to replace Engineer, provided Contractor makes no reasonable objection to the replacement engineer. The replacement engineer's status under the Contract Documents will be that of the former Engineer.

9.03 *Furnish Data*

A. Owner shall promptly furnish the data required of Owner under the Contract Documents.

9.04 *Pay When Due*

A. Owner shall make payments to Contractor when they are due as provided in the Agreement.

9.05 *Lands and Easements; Reports, Tests, and Drawings*

A. Owner's duties with respect to providing lands and easements are set forth in Paragraph 5.01.

B. Owner's duties with respect to providing engineering surveys to establish reference points are set forth in Paragraph 4.03.

C. Article 5 refers to Owner's identifying and making available to Contractor copies of reports of explorations and tests of conditions at the Site, and drawings of physical conditions relating to existing surface or subsurface structures at the Site.

9.06 *Insurance*

A. Owner's responsibilities, if any, with respect to purchasing and maintaining liability and property insurance are set forth in Article 6.

9.07 *Change Orders*

A. Owner's responsibilities with respect to Change Orders are set forth in Article 11.

Copyright© 2018 National Society of Professional Engineers, American Council of Engineering Companies, and American Society of Civil Engineers. All rights reserved.

9.08 *Inspections, Tests, and Approvals*

A. Owner's responsibility with respect to certain inspections, tests, and approvals is set forth in Paragraph 14.02.B.

9.09 *Limitations on Owner's Responsibilities*

A. The Owner shall not supervise, direct, or have control or authority over, nor be responsible for, Contractor's means, methods, techniques, sequences, or procedures of construction, or the safety precautions and programs incident thereto, or for any failure of Contractor to comply with Laws and Regulations applicable to the performance of the Work. Owner will not be responsible for Contractor's failure to perform the Work in accordance with the Contract Documents.

9.10 *Undisclosed Hazardous Environmental Condition*

A. Owner's responsibility in respect to an undisclosed Hazardous Environmental Condition is set forth in Paragraph 5.06.

9.11 *Evidence of Financial Arrangements*

A. Upon request of Contractor, Owner shall furnish Contractor reasonable evidence that financial arrangements have been made to satisfy Owner's obligations under the Contract (including obligations under proposed changes in the Work).

9.12 *Safety Programs*

A. While at the Site, Owner's employees and representatives shall comply with the specific applicable requirements of Contractor's safety programs of which Owner has been informed.

B. Owner shall furnish copies of any applicable Owner safety programs to Contractor.

ARTICLE 10—ENGINEER'S STATUS DURING CONSTRUCTION

10.01 *Owner's Representative*

A. Engineer will be Owner's representative during the construction period. The duties and responsibilities and the limitations of authority of Engineer as Owner's representative during construction are set forth in the Contract.

10.02 *Visits to Site*

A. Engineer will make visits to the Site at intervals appropriate to the various stages of construction as Engineer deems necessary in order to observe, as an experienced and qualified design professional, the progress that has been made and the quality of the various aspects of Contractor's executed Work. Based on information obtained during such visits and observations, Engineer, for the benefit of Owner, will determine, in general, if the Work is proceeding in accordance with the Contract Documents. Engineer will not be required to make exhaustive or continuous inspections on the Site to check the quality or quantity of the Work. Engineer's efforts will be directed toward providing for Owner a greater degree of confidence that the completed Work will conform generally to the Contract Documents. On the basis of such visits and observations, Engineer will keep Owner informed of the progress of the Work and will endeavor to guard Owner against defective Work.

Copyright© 2018 National Society of Professional Engineers, American Council of Engineering Companies, and American Society of Civil Engineers. All rights reserved.

B. Engineer's visits and observations are subject to all the limitations on Engineer's authority and responsibility set forth in Paragraph 10.07. Particularly, but without limitation, during or as a result of Engineer's visits or observations of Contractor's Work, Engineer will not supervise, direct, control, or have authority over or be responsible for Contractor's means, methods, techniques, sequences, or procedures of construction, or the safety precautions and programs incident thereto, or for any failure of Contractor to comply with Laws and Regulations applicable to the performance of the Work.

10.03 *Resident Project Representative*

A. If Owner and Engineer have agreed that Engineer will furnish a Resident Project Representative to represent Engineer at the Site and assist Engineer in observing the progress and quality of the Work, then the authority and responsibilities of any such Resident Project Representative will be as provided in the Supplementary Conditions, and limitations on the responsibilities thereof will be as provided in the Supplementary Conditions and in Paragraph 10.07.

B. If Owner designates an individual or entity who is not Engineer's consultant, agent, or employee to represent Owner at the Site, then the responsibilities and authority of such individual or entity will be as provided in the Supplementary Conditions.

10.04 *Engineer's Authority*

A. Engineer has the authority to reject Work in accordance with Article 14.

B. Engineer's authority as to Submittals is set forth in Paragraph 7.16.

C. Engineer's authority as to design drawings, calculations, specifications, certifications and other Submittals from Contractor in response to Owner's delegation (if any) to Contractor of professional design services, is set forth in Paragraph 7.19.

D. Engineer's authority as to changes in the Work is set forth in Article 11.

E. Engineer's authority as to Applications for Payment is set forth in Article 15.

10.05 *Determinations for Unit Price Work*

A. Engineer will determine the actual quantities and classifications of Unit Price Work performed by Contractor as set forth in Paragraph 13.03.

10.06 *Decisions on Requirements of Contract Documents and Acceptability of Work*

A. Engineer will render decisions regarding the requirements of the Contract Documents, and judge the acceptability of the Work, pursuant to the specific procedures set forth herein for initial interpretations, Change Proposals, and acceptance of the Work. In rendering such decisions and judgments, Engineer will not show partiality to Owner or Contractor, and will not be liable to Owner, Contractor, or others in connection with any proceedings, interpretations, decisions, or judgments conducted or rendered in good faith.

10.07 *Limitations on Engineer's Authority and Responsibilities*

A. Neither Engineer's authority or responsibility under this Article 10 or under any other provision of the Contract, nor any decision made by Engineer in good faith either to exercise or not exercise such authority or responsibility or the undertaking, exercise, or performance of any authority or responsibility by Engineer, will create, impose, or give rise to any duty in contract, tort, or otherwise owed by Engineer to Contractor, any Subcontractor, any

Copyright© 2018 National Society of Professional Engineers, American Council of Engineering Companies, and American Society of Civil Engineers. All rights reserved.

Supplier, any other individual or entity, or to any surety for or employee or agent of any of them.

B. Engineer will not supervise, direct, control, or have authority over or be responsible for Contractor's means, methods, techniques, sequences, or procedures of construction, or the safety precautions and programs incident thereto, or for any failure of Contractor to comply with Laws and Regulations applicable to the performance of the Work. Engineer will not be responsible for Contractor's failure to perform the Work in accordance with the Contract Documents.

C. Engineer will not be responsible for the acts or omissions of Contractor or of any Subcontractor, any Supplier, or of any other individual or entity performing any of the Work.

D. Engineer's review of the final Application for Payment and accompanying documentation, and all maintenance and operating instructions, schedules, guarantees, bonds, certificates of inspection, tests and approvals, and other documentation required to be delivered by Contractor under Paragraph 15.06.A, will only be to determine generally that their content complies with the requirements of, and in the case of certificates of inspections, tests, and approvals, that the results certified indicate compliance with the Contract Documents.

E. The limitations upon authority and responsibility set forth in this Paragraph 10.07 also apply to the Resident Project Representative, if any.

10.08 *Compliance with Safety Program*

A. While at the Site, Engineer's employees and representatives will comply with the specific applicable requirements of Owner's and Contractor's safety programs of which Engineer has been informed.

ARTICLE 11—CHANGES TO THE CONTRACT

11.01 *Amending and Supplementing the Contract*

A. The Contract may be amended or supplemented by a Change Order, a Work Change Directive, or a Field Order.

B. If an amendment or supplement to the Contract includes a change in the Contract Price or the Contract Times, such amendment or supplement must be set forth in a Change Order.

C. All changes to the Contract that involve (1) the performance or acceptability of the Work, (2) the design (as set forth in the Drawings, Specifications, or otherwise), or (3) other engineering or technical matters, must be supported by Engineer's recommendation. Owner and Contractor may amend other terms and conditions of the Contract without the recommendation of the Engineer.

11.02 *Change Orders*

A. Owner and Contractor shall execute appropriate Change Orders covering:

1. Changes in Contract Price or Contract Times which are agreed to by the parties, including any undisputed sum or amount of time for Work actually performed in accordance with a Work Change Directive;

2. Changes in Contract Price resulting from an Owner set-off, unless Contractor has duly contested such set-off;

Copyright© 2018 National Society of Professional Engineers, American Council of Engineering Companies, and American Society of Civil Engineers. All rights reserved.

3. Changes in the Work which are: (a) ordered by Owner pursuant to Paragraph 11.05, (b) required because of Owner's acceptance of defective Work under Paragraph 14.04 or Owner's correction of defective Work under Paragraph 14.07, or (c) agreed to by the parties, subject to the need for Engineer's recommendation if the change in the Work involves the design (as set forth in the Drawings, Specifications, or otherwise) or other engineering or technical matters; and

4. Changes that embody the substance of any final and binding results under: Paragraph 11.03.B, resolving the impact of a Work Change Directive; Paragraph 11.09, concerning Change Proposals; Article 12, Claims; Paragraph 13.02.D, final adjustments resulting from allowances; Paragraph 13.03.D, final adjustments relating to determination of quantities for Unit Price Work; and similar provisions.

B. If Owner or Contractor refuses to execute a Change Order that is required to be executed under the terms of Paragraph 11.02.A, it will be deemed to be of full force and effect, as if fully executed.

11.03 *Work Change Directives*

A. A Work Change Directive will not change the Contract Price or the Contract Times but is evidence that the parties expect that the modification ordered or documented by a Work Change Directive will be incorporated in a subsequently issued Change Order, following negotiations by the parties as to the Work Change Directive's effect, if any, on the Contract Price and Contract Times; or, if negotiations are unsuccessful, by a determination under the terms of the Contract Documents governing adjustments, expressly including Paragraph 11.07 regarding change of Contract Price.

B. If Owner has issued a Work Change Directive and:

1. Contractor believes that an adjustment in Contract Times or Contract Price is necessary, then Contractor shall submit any Change Proposal seeking such an adjustment no later than 30 days after the completion of the Work set out in the Work Change Directive.

2. Owner believes that an adjustment in Contract Times or Contract Price is necessary, then Owner shall submit any Claim seeking such an adjustment no later than 60 days after issuance of the Work Change Directive.

11.04 *Field Orders*

A. Engineer may authorize minor changes in the Work if the changes do not involve an adjustment in the Contract Price or the Contract Times and are compatible with the design concept of the completed Project as a functioning whole as indicated by the Contract Documents. Such changes will be accomplished by a Field Order and will be binding on Owner and also on Contractor, which shall perform the Work involved promptly.

B. If Contractor believes that a Field Order justifies an adjustment in the Contract Price or Contract Times, then before proceeding with the Work at issue, Contractor shall submit a Change Proposal as provided herein.

11.05 *Owner-Authorized Changes in the Work*

A. Without invalidating the Contract and without notice to any surety, Owner may, at any time or from time to time, order additions, deletions, or revisions in the Work. Changes involving

Copyright© 2018 National Society of Professional Engineers, American Council of Engineering Companies, and American Society of Civil Engineers. All rights reserved.

the design (as set forth in the Drawings, Specifications, or otherwise) or other engineering or technical matters will be supported by Engineer's recommendation.

B. Such changes in the Work may be accomplished by a Change Order, if Owner and Contractor have agreed as to the effect, if any, of the changes on Contract Times or Contract Price; or by a Work Change Directive. Upon receipt of any such document, Contractor shall promptly proceed with the Work involved; or, in the case of a deletion in the Work, promptly cease construction activities with respect to such deleted Work. Added or revised Work must be performed under the applicable conditions of the Contract Documents.

C. Nothing in this Paragraph 11.05 obligates Contractor to undertake work that Contractor reasonably concludes cannot be performed in a manner consistent with Contractor's safety obligations under the Contract Documents or Laws and Regulations.

11.06 *Unauthorized Changes in the Work*

A. Contractor shall not be entitled to an increase in the Contract Price or an extension of the Contract Times with respect to any work performed that is not required by the Contract Documents, as amended, modified, or supplemented, except in the case of an emergency as provided in Paragraph 7.15 or in the case of uncovering Work as provided in Paragraph 14.05.C.2.

11.07 *Change of Contract Price*

A. The Contract Price may only be changed by a Change Order. Any Change Proposal for an adjustment in the Contract Price must comply with the provisions of Paragraph 11.09. Any Claim for an adjustment of Contract Price must comply with the provisions of Article 12.

B. An adjustment in the Contract Price will be determined as follows:

1. Where the Work involved is covered by unit prices contained in the Contract Documents, then by application of such unit prices to the quantities of the items involved (subject to the provisions of Paragraph 13.03);

2. Where the Work involved is not covered by unit prices contained in the Contract Documents, then by a mutually agreed lump sum (which may include an allowance for overhead and profit not necessarily in accordance with Paragraph 11.07.C.2); or

3. Where the Work involved is not covered by unit prices contained in the Contract Documents and the parties do not reach mutual agreement to a lump sum, then on the basis of the Cost of the Work (determined as provided in Paragraph 13.01) plus a Contractor's fee for overhead and profit (determined as provided in Paragraph 11.07.C).

C. *Contractor's Fee*: When applicable, the Contractor's fee for overhead and profit will be determined as follows:

1. A mutually acceptable fixed fee; or

2. If a fixed fee is not agreed upon, then a fee based on the following percentages of the various portions of the Cost of the Work:

a. For costs incurred under Paragraphs 13.01.B.1 and 13.01.B.2, the Contractor's fee will be 15 percent;

b. For costs incurred under Paragraph 13.01.B.3, the Contractor's fee will be 5 percent;

Copyright© 2018 National Society of Professional Engineers, American Council of Engineering Companies, and American Society of Civil Engineers. All rights reserved.

c. Where one or more tiers of subcontracts are on the basis of Cost of the Work plus a fee and no fixed fee is agreed upon, the intent of Paragraphs 11.07.C.2.a and 11.07.C.2.b is that the Contractor's fee will be based on: (1) a fee of 15 percent of the costs incurred under Paragraphs 13.01.B.1 and 13.01.B.2 by the Subcontractor that actually performs the Work, at whatever tier, and (2) with respect to Contractor itself and to any Subcontractors of a tier higher than that of the Subcontractor that actually performs the Work, a fee of 5 percent of the amount (fee plus underlying costs incurred) attributable to the next lower tier Subcontractor; provided, however, that for any such subcontracted Work the maximum total fee to be paid by Owner will be no greater than 27 percent of the costs incurred by the Subcontractor that actually performs the Work;

d. No fee will be payable on the basis of costs itemized under Paragraphs 13.01.B.4, 13.01.B.5, and 13.01.C;

e. The amount of credit to be allowed by Contractor to Owner for any change which results in a net decrease in Cost of the Work will be the amount of the actual net decrease in Cost of the Work and a deduction of an additional amount equal to 5 percent of such actual net decrease in Cost of the Work; and

f. When both additions and credits are involved in any one change or Change Proposal, the adjustment in Contractor's fee will be computed by determining the sum of the costs in each of the cost categories in Paragraph 13.01.B (specifically, payroll costs, Paragraph 13.01.B.1; incorporated materials and equipment costs, Paragraph 13.01.B.2; Subcontract costs, Paragraph 13.01.B.3; special consultants costs, Paragraph 13.01.B.4; and other costs, Paragraph 13.01.B.5) and applying to each such cost category sum the appropriate fee from Paragraphs 11.07.C.2.a through 11.07.C.2.e, inclusive.

11.08 *Change of Contract Times*

A. The Contract Times may only be changed by a Change Order. Any Change Proposal for an adjustment in the Contract Times must comply with the provisions of Paragraph 11.09. Any Claim for an adjustment in the Contract Times must comply with the provisions of Article 12.

B. Delay, disruption, and interference in the Work, and any related changes in Contract Times, are addressed in and governed by Paragraph 4.05.

11.09 *Change Proposals*

A. *Purpose and Content*: Contractor shall submit a Change Proposal to Engineer to request an adjustment in the Contract Times or Contract Price; contest an initial decision by Engineer concerning the requirements of the Contract Documents or relating to the acceptability of the Work under the Contract Documents; challenge a set-off against payment due; or seek other relief under the Contract. The Change Proposal will specify any proposed change in Contract Times or Contract Price, or other proposed relief, and explain the reason for the proposed change, with citations to any governing or applicable provisions of the Contract Documents. Each Change Proposal will address only one issue, or a set of closely related issues.

Copyright© 2018 National Society of Professional Engineers, American Council of Engineering Companies, and American Society of Civil Engineers. All rights reserved.

B. *Change Proposal Procedures*

1. *Submittal*: Contractor shall submit each Change Proposal to Engineer within 30 days after the start of the event giving rise thereto, or after such initial decision.

2. *Supporting Data*: The Contractor shall submit supporting data, including the proposed change in Contract Price or Contract Time (if any), to the Engineer and Owner within 15 days after the submittal of the Change Proposal.

   a. Change Proposals based on or related to delay, interruption, or interference must comply with the provisions of Paragraphs 4.05.D and 4.05.E.

   b. Change proposals related to a change of Contract Price must include full and detailed accounts of materials incorporated into the Work and labor and equipment used for the subject Work.

   The supporting data must be accompanied by a written statement that the supporting data are accurate and complete, and that any requested time or price adjustment is the entire adjustment to which Contractor believes it is entitled as a result of said event.

3. *Engineer's Initial Review*: Engineer will advise Owner regarding the Change Proposal, and consider any comments or response from Owner regarding the Change Proposal. If in its discretion Engineer concludes that additional supporting data is needed before conducting a full review and making a decision regarding the Change Proposal, then Engineer may request that Contractor submit such additional supporting data by a date specified by Engineer, prior to Engineer beginning its full review of the Change Proposal.

4. *Engineer's Full Review and Action on the Change Proposal*: Upon receipt of Contractor's supporting data (including any additional data requested by Engineer), Engineer will conduct a full review of each Change Proposal and, within 30 days after such receipt of the Contractor's supporting data, either approve the Change Proposal in whole, deny it in whole, or approve it in part and deny it in part. Such actions must be in writing, with a copy provided to Owner and Contractor. If Engineer does not take action on the Change Proposal within 30 days, then either Owner or Contractor may at any time thereafter submit a letter to the other party indicating that as a result of Engineer's inaction the Change Proposal is deemed denied, thereby commencing the time for appeal of the denial under Article 12.

5. *Binding Decision*: Engineer's decision is final and binding upon Owner and Contractor, unless Owner or Contractor appeals the decision by filing a Claim under Article 12.

C. *Resolution of Certain Change Proposals*: If the Change Proposal does not involve the design (as set forth in the Drawings, Specifications, or otherwise), the acceptability of the Work, or other engineering or technical matters, then Engineer will notify the parties in writing that the Engineer is unable to resolve the Change Proposal. For purposes of further resolution of such a Change Proposal, such notice will be deemed a denial, and Contractor may choose to seek resolution under the terms of Article 12.

D. *Post-Completion*: Contractor shall not submit any Change Proposals after Engineer issues a written recommendation of final payment pursuant to Paragraph 15.06.B.

Copyright© 2018 National Society of Professional Engineers, American Council of Engineering Companies, and American Society of Civil Engineers. All rights reserved.

11.10 *Notification to Surety*

A. If the provisions of any bond require notice to be given to a surety of any change affecting the general scope of the Work or the provisions of the Contract Documents (including, but not limited to, Contract Price or Contract Times), the giving of any such notice will be Contractor's responsibility. The amount of each applicable bond will be adjusted to reflect the effect of any such change.

ARTICLE 12—CLAIMS

12.01 *Claims*

A. *Claims Process*: The following disputes between Owner and Contractor are subject to the Claims process set forth in this article:

1. Appeals by Owner or Contractor of Engineer's decisions regarding Change Proposals;
2. Owner demands for adjustments in the Contract Price or Contract Times, or other relief under the Contract Documents;
3. Disputes that Engineer has been unable to address because they do not involve the design (as set forth in the Drawings, Specifications, or otherwise), the acceptability of the Work, or other engineering or technical matters; and
4. Subject to the waiver provisions of Paragraph 15.07, any dispute arising after Engineer has issued a written recommendation of final payment pursuant to Paragraph 15.06.B.

B. *Submittal of Claim*: The party submitting a Claim shall deliver it directly to the other party to the Contract promptly (but in no event later than 30 days) after the start of the event giving rise thereto; in the case of appeals regarding Change Proposals within 30 days of the decision under appeal. The party submitting the Claim shall also furnish a copy to the Engineer, for its information only. The responsibility to substantiate a Claim rests with the party making the Claim. In the case of a Claim by Contractor seeking an increase in the Contract Times or Contract Price, Contractor shall certify that the Claim is made in good faith, that the supporting data are accurate and complete, and that to the best of Contractor's knowledge and belief the amount of time or money requested accurately reflects the full amount to which Contractor is entitled.

C. *Review and Resolution*: The party receiving a Claim shall review it thoroughly, giving full consideration to its merits. The two parties shall seek to resolve the Claim through the exchange of information and direct negotiations. The parties may extend the time for resolving the Claim by mutual agreement. All actions taken on a Claim will be stated in writing and submitted to the other party, with a copy to Engineer.

D. *Mediation*

1. At any time after initiation of a Claim, Owner and Contractor may mutually agree to mediation of the underlying dispute. The agreement to mediate will stay the Claim submittal and response process.
2. If Owner and Contractor agree to mediation, then after 60 days from such agreement, either Owner or Contractor may unilaterally terminate the mediation process, and the Claim submittal and decision process will resume as of the date of the termination. If the mediation proceeds but is unsuccessful in resolving the dispute, the Claim submittal

Copyright© 2018 National Society of Professional Engineers, American Council of Engineering Companies, and American Society of Civil Engineers. All rights reserved.

and decision process will resume as of the date of the conclusion of the mediation, as determined by the mediator.

3. Owner and Contractor shall each pay one-half of the mediator's fees and costs.

E. *Partial Approval*: If the party receiving a Claim approves the Claim in part and denies it in part, such action will be final and binding unless within 30 days of such action the other party invokes the procedure set forth in Article 17 for final resolution of disputes.

F. *Denial of Claim*: If efforts to resolve a Claim are not successful, the party receiving the Claim may deny it by giving written notice of denial to the other party. If the receiving party does not take action on the Claim within 90 days, then either Owner or Contractor may at any time thereafter submit a letter to the other party indicating that as a result of the inaction, the Claim is deemed denied, thereby commencing the time for appeal of the denial. A denial of the Claim will be final and binding unless within 30 days of the denial the other party invokes the procedure set forth in Article 17 for the final resolution of disputes.

G. *Final and Binding Results*: If the parties reach a mutual agreement regarding a Claim, whether through approval of the Claim, direct negotiations, mediation, or otherwise; or if a Claim is approved in part and denied in part, or denied in full, and such actions become final and binding; then the results of the agreement or action on the Claim will be incorporated in a Change Order or other written document to the extent they affect the Contract, including the Work, the Contract Times, or the Contract Price.

ARTICLE 13—COST OF THE WORK; ALLOWANCES; UNIT PRICE WORK

13.01 *Cost of the Work*

A. *Purposes for Determination of Cost of the Work*: The term Cost of the Work means the sum of all costs necessary for the proper performance of the Work at issue, as further defined below. The provisions of this Paragraph 13.01 are used for two distinct purposes:

1. To determine Cost of the Work when Cost of the Work is a component of the Contract Price, under cost-plus-fee, time-and-materials, or other cost-based terms; or

2. When needed to determine the value of a Change Order, Change Proposal, Claim, set-off, or other adjustment in Contract Price. When the value of any such adjustment is determined on the basis of Cost of the Work, Contractor is entitled only to those additional or incremental costs required because of the change in the Work or because of the event giving rise to the adjustment.

B. *Costs Included*: Except as otherwise may be agreed to in writing by Owner, costs included in the Cost of the Work will be in amounts no higher than those commonly incurred in the locality of the Project, will not include any of the costs itemized in Paragraph 13.01.C, and will include only the following items:

1. Payroll costs for employees in the direct employ of Contractor in the performance of the Work under schedules of job classifications agreed upon by Owner and Contractor in advance of the subject Work. Such employees include, without limitation, superintendents, foremen, safety managers, safety representatives, and other personnel employed full time on the Work. Payroll costs for employees not employed full time on the Work will be apportioned on the basis of their time spent on the Work. Payroll costs include, but are not limited to, salaries and wages plus the cost of fringe

Copyright© 2018 National Society of Professional Engineers, American Council of Engineering Companies, and American Society of Civil Engineers. All rights reserved.

benefits, which include social security contributions, unemployment, excise, and payroll taxes, workers' compensation, health and retirement benefits, sick leave, and vacation and holiday pay applicable thereto. The expenses of performing Work outside of regular working hours, on Saturday, Sunday, or legal holidays, will be included in the above to the extent authorized by Owner.

2. Cost of all materials and equipment furnished and incorporated in the Work, including costs of transportation and storage thereof, and Suppliers' field services required in connection therewith. All cash discounts accrue to Contractor unless Owner deposits funds with Contractor with which to make payments, in which case the cash discounts will accrue to Owner. All trade discounts, rebates, and refunds and returns from sale of surplus materials and equipment will accrue to Owner, and Contractor shall make provisions so that they may be obtained.

3. Payments made by Contractor to Subcontractors for Work performed by Subcontractors. If required by Owner, Contractor shall obtain competitive bids from subcontractors acceptable to Owner and Contractor and shall deliver such bids to Owner, which will then determine, with the advice of Engineer, which bids, if any, will be acceptable. If any subcontract provides that the Subcontractor is to be paid on the basis of Cost of the Work plus a fee, the Subcontractor's Cost of the Work and fee will be determined in the same manner as Contractor's Cost of the Work and fee as provided in this Paragraph 13.01.

4. Costs of special consultants (including but not limited to engineers, architects, testing laboratories, surveyors, attorneys, and accountants) employed or retained for services specifically related to the Work.

5. Other costs consisting of the following:

   a. The proportion of necessary transportation, travel, and subsistence expenses of Contractor's employees incurred in discharge of duties connected with the Work.

   b. Cost, including transportation and maintenance, of all materials, supplies, equipment, machinery, appliances, office, and temporary facilities at the Site, which are consumed in the performance of the Work, and cost, less market value, of such items used but not consumed which remain the property of Contractor.

      1) In establishing included costs for materials such as scaffolding, plating, or sheeting, consideration will be given to the actual or the estimated life of the material for use on other projects; or rental rates may be established on the basis of purchase or salvage value of such items, whichever is less. Contractor will not be eligible for compensation for such items in an amount that exceeds the purchase cost of such item.

   c. *Construction Equipment Rental*

      1) Rentals of all construction equipment and machinery, and the parts thereof, in accordance with rental agreements approved by Owner as to price (including any surcharge or special rates applicable to overtime use of the construction equipment or machinery), and the costs of transportation, loading, unloading, assembly, dismantling, and removal thereof. All such costs will be in accordance with the terms of said rental agreements. The rental of any such equipment,

Copyright© 2018 National Society of Professional Engineers, American Council of Engineering Companies, and American Society of Civil Engineers. All rights reserved.

machinery, or parts must cease when the use thereof is no longer necessary for the Work.

2) Costs for equipment and machinery owned by Contractor or a Contractor-related entity will be paid at a rate shown for such equipment in the equipment rental rate book specified in the Supplementary Conditions. An hourly rate will be computed by dividing the monthly rates by 176. These computed rates will include all operating costs.

3) With respect to Work that is the result of a Change Order, Change Proposal, Claim, set-off, or other adjustment in Contract Price ("changed Work"), included costs will be based on the time the equipment or machinery is in use on the changed Work and the costs of transportation, loading, unloading, assembly, dismantling, and removal when directly attributable to the changed Work. The cost of any such equipment or machinery, or parts thereof, must cease to accrue when the use thereof is no longer necessary for the changed Work.

d. Sales, consumer, use, and other similar taxes related to the Work, and for which Contractor is liable, as imposed by Laws and Regulations.

e. Deposits lost for causes other than negligence of Contractor, any Subcontractor, or anyone directly or indirectly employed by any of them or for whose acts any of them may be liable, and royalty payments and fees for permits and licenses.

f. Losses and damages (and related expenses) caused by damage to the Work, not compensated by insurance or otherwise, sustained by Contractor in connection with the performance of the Work (except losses and damages within the deductible amounts of builder's risk or other property insurance established in accordance with Paragraph 6.04), provided such losses and damages have resulted from causes other than the negligence of Contractor, any Subcontractor, or anyone directly or indirectly employed by any of them or for whose acts any of them may be liable. Such losses include settlements made with the written consent and approval of Owner. No such losses, damages, and expenses will be included in the Cost of the Work for the purpose of determining Contractor's fee.

g. The cost of utilities, fuel, and sanitary facilities at the Site.

h. Minor expenses such as communication service at the Site, express and courier services, and similar petty cash items in connection with the Work.

i. The costs of premiums for all bonds and insurance that Contractor is required by the Contract Documents to purchase and maintain.

C. *Costs Excluded*: The term Cost of the Work does not include any of the following items:

1. Payroll costs and other compensation of Contractor's officers, executives, principals, general managers, engineers, architects, estimators, attorneys, auditors, accountants, purchasing and contracting agents, expediters, timekeepers, clerks, and other personnel employed by Contractor, whether at the Site or in Contractor's principal or branch office for general administration of the Work and not specifically included in the agreed upon schedule of job classifications referred to in Paragraph 13.01.B.1 or specifically covered by Paragraph 13.01.B.4. The payroll costs and other compensation excluded here are to be considered administrative costs covered by the Contractor's fee.

Copyright© 2018 National Society of Professional Engineers, American Council of Engineering Companies, and American Society of Civil Engineers. All rights reserved.

2. The cost of purchasing, renting, or furnishing small tools and hand tools.
3. Expenses of Contractor's principal and branch offices other than Contractor's office at the Site.
4. Any part of Contractor's capital expenses, including interest on Contractor's capital employed for the Work and charges against Contractor for delinquent payments.
5. Costs due to the negligence of Contractor, any Subcontractor, or anyone directly or indirectly employed by any of them or for whose acts any of them may be liable, including but not limited to, the correction of defective Work, disposal of materials or equipment wrongly supplied, and making good any damage to property.
6. Expenses incurred in preparing and advancing Claims.
7. Other overhead or general expense costs of any kind and the costs of any item not specifically and expressly included in Paragraph 13.01.B.

D. *Contractor's Fee*

1. When the Work as a whole is performed on the basis of cost-plus-a-fee, then:
   a. Contractor's fee for the Work set forth in the Contract Documents as of the Effective Date of the Contract will be determined as set forth in the Agreement.
   b. for any Work covered by a Change Order, Change Proposal, Claim, set-off, or other adjustment in Contract Price on the basis of Cost of the Work, Contractor's fee will be determined as follows:
      1) When the fee for the Work as a whole is a percentage of the Cost of the Work, the fee will automatically adjust as the Cost of the Work changes.
      2) When the fee for the Work as a whole is a fixed fee, the fee for any additions or deletions will be determined in accordance with Paragraph 11.07.C.2.
2. When the Work as a whole is performed on the basis of a stipulated sum, or any other basis other than cost-plus-a-fee, then Contractor's fee for any Work covered by a Change Order, Change Proposal, Claim, set-off, or other adjustment in Contract Price on the basis of Cost of the Work will be determined in accordance with Paragraph 11.07.C.2.

E. *Documentation and Audit*: Whenever the Cost of the Work for any purpose is to be determined pursuant to this Article 13, Contractor and pertinent Subcontractors will establish and maintain records of the costs in accordance with generally accepted accounting practices. Subject to prior written notice, Owner will be afforded reasonable access, during normal business hours, to all Contractor's accounts, records, books, correspondence, instructions, drawings, receipts, vouchers, memoranda, and similar data relating to the Cost of the Work and Contractor's fee. Contractor shall preserve all such documents for a period of three years after the final payment by Owner. Pertinent Subcontractors will afford such access to Owner, and preserve such documents, to the same extent required of Contractor.

Copyright© 2018 National Society of Professional Engineers, American Council of Engineering Companies, and American Society of Civil Engineers. All rights reserved.

13.02 *Allowances*

A. It is understood that Contractor has included in the Contract Price all allowances so named in the Contract Documents and shall cause the Work so covered to be performed for such sums and by such persons or entities as may be acceptable to Owner and Engineer.

B. *Cash Allowances*: Contractor agrees that:

1. the cash allowances include the cost to Contractor (less any applicable trade discounts) of materials and equipment required by the allowances to be delivered at the Site, and all applicable taxes; and

2. Contractor's costs for unloading and handling on the Site, labor, installation, overhead, profit, and other expenses contemplated for the cash allowances have been included in the Contract Price and not in the allowances, and no demand for additional payment for any of the foregoing will be valid.

C. *Owner's Contingency Allowance*: Contractor agrees that an Owner's contingency allowance, if any, is for the sole use of Owner to cover unanticipated costs.

D. Prior to final payment, an appropriate Change Order will be issued as recommended by Engineer to reflect actual amounts due Contractor for Work covered by allowances, and the Contract Price will be correspondingly adjusted.

13.03 *Unit Price Work*

A. Where the Contract Documents provide that all or part of the Work is to be Unit Price Work, initially the Contract Price will be deemed to include for all Unit Price Work an amount equal to the sum of the unit price for each separately identified item of Unit Price Work times the estimated quantity of each item as indicated in the Agreement.

B. The estimated quantities of items of Unit Price Work are not guaranteed and are solely for the purpose of comparison of Bids and determining an initial Contract Price. Payments to Contractor for Unit Price Work will be based on actual quantities.

C. Each unit price will be deemed to include an amount considered by Contractor to be adequate to cover Contractor's overhead and profit for each separately identified item.

D. Engineer will determine the actual quantities and classifications of Unit Price Work performed by Contractor. Engineer will review with Contractor the Engineer's preliminary determinations on such matters before rendering a written decision thereon (by recommendation of an Application for Payment or otherwise). Engineer's written decision thereon will be final and binding (except as modified by Engineer to reflect changed factual conditions or more accurate data) upon Owner and Contractor, and the final adjustment of Contract Price will be set forth in a Change Order, subject to the provisions of the following paragraph.

E. *Adjustments in Unit Price*

1. Contractor or Owner shall be entitled to an adjustment in the unit price with respect to an item of Unit Price Work if:

a. the quantity of the item of Unit Price Work performed by Contractor differs materially and significantly from the estimated quantity of such item indicated in the Agreement; and

Copyright© 2018 National Society of Professional Engineers, American Council of Engineering Companies, and American Society of Civil Engineers. All rights reserved.

b. Contractor's unit costs to perform the item of Unit Price Work have changed materially and significantly as a result of the quantity change.

2. The adjustment in unit price will account for and be coordinated with any related changes in quantities of other items of Work, and in Contractor's costs to perform such other Work, such that the resulting overall change in Contract Price is equitable to Owner and Contractor.

3. Adjusted unit prices will apply to all units of that item.

ARTICLE 14—TESTS AND INSPECTIONS; CORRECTION, REMOVAL, OR ACCEPTANCE OF DEFECTIVE WORK

14.01 *Access to Work*

A. Owner, Engineer, their consultants and other representatives and personnel of Owner, independent testing laboratories, and authorities having jurisdiction have access to the Site and the Work at reasonable times for their observation, inspection, and testing. Contractor shall provide them proper and safe conditions for such access and advise them of Contractor's safety procedures and programs so that they may comply with such procedures and programs as applicable.

14.02 *Tests, Inspections, and Approvals*

A. Contractor shall give Engineer timely notice of readiness of the Work (or specific parts thereof) for all required inspections and tests, and shall cooperate with inspection and testing personnel to facilitate required inspections and tests.

B. Owner shall retain and pay for the services of an independent inspector, testing laboratory, or other qualified individual or entity to perform all inspections and tests expressly required by the Contract Documents to be furnished and paid for by Owner, except that costs incurred in connection with tests or inspections of covered Work will be governed by the provisions of Paragraph 14.05.

C. If Laws or Regulations of any public body having jurisdiction require any Work (or part thereof) specifically to be inspected, tested, or approved by an employee or other representative of such public body, Contractor shall assume full responsibility for arranging and obtaining such inspections, tests, or approvals, pay all costs in connection therewith, and furnish Engineer the required certificates of inspection or approval.

D. Contractor shall be responsible for arranging, obtaining, and paying for all inspections and tests required:

1. by the Contract Documents, unless the Contract Documents expressly allocate responsibility for a specific inspection or test to Owner;

2. to attain Owner's and Engineer's acceptance of materials or equipment to be incorporated in the Work;

3. by manufacturers of equipment furnished under the Contract Documents;

4. for testing, adjusting, and balancing of mechanical, electrical, and other equipment to be incorporated into the Work; and

Copyright© 2018 National Society of Professional Engineers, American Council of Engineering Companies, and American Society of Civil Engineers. All rights reserved.

5. for acceptance of materials, mix designs, or equipment submitted for approval prior to Contractor's purchase thereof for incorporation in the Work.

Such inspections and tests will be performed by independent inspectors, testing laboratories, or other qualified individuals or entities acceptable to Owner and Engineer.

E. If the Contract Documents require the Work (or part thereof) to be approved by Owner, Engineer, or another designated individual or entity, then Contractor shall assume full responsibility for arranging and obtaining such approvals.

F. If any Work (or the work of others) that is to be inspected, tested, or approved is covered by Contractor without written concurrence of Engineer, Contractor shall, if requested by Engineer, uncover such Work for observation. Such uncovering will be at Contractor's expense unless Contractor had given Engineer timely notice of Contractor's intention to cover the same and Engineer had not acted with reasonable promptness in response to such notice.

14.03 *Defective Work*

A. *Contractor's Obligation*: It is Contractor's obligation to assure that the Work is not defective.

B. *Engineer's Authority*: Engineer has the authority to determine whether Work is defective, and to reject defective Work.

C. *Notice of Defects*: Prompt written notice of all defective Work of which Owner or Engineer has actual knowledge will be given to Contractor.

D. *Correction, or Removal and Replacement*: Promptly after receipt of written notice of defective Work, Contractor shall correct all such defective Work, whether or not fabricated, installed, or completed, or, if Engineer has rejected the defective Work, remove it from the Project and replace it with Work that is not defective.

E. *Preservation of Warranties*: When correcting defective Work, Contractor shall take no action that would void or otherwise impair Owner's special warranty and guarantee, if any, on said Work.

F. *Costs and Damages*: In addition to its correction, removal, and replacement obligations with respect to defective Work, Contractor shall pay all claims, costs, losses, and damages arising out of or relating to defective Work, including but not limited to the cost of the inspection, testing, correction, removal, replacement, or reconstruction of such defective Work, fines levied against Owner by governmental authorities because the Work is defective, and the costs of repair or replacement of work of others resulting from defective Work. Prior to final payment, if Owner and Contractor are unable to agree as to the measure of such claims, costs, losses, and damages resulting from defective Work, then Owner may impose a reasonable set-off against payments due under Article 15.

14.04 *Acceptance of Defective Work*

A. If, instead of requiring correction or removal and replacement of defective Work, Owner prefers to accept it, Owner may do so (subject, if such acceptance occurs prior to final payment, to Engineer's confirmation that such acceptance is in general accord with the design intent and applicable engineering principles, and will not endanger public safety). Contractor shall pay all claims, costs, losses, and damages attributable to Owner's evaluation of and determination to accept such defective Work (such costs to be approved

Copyright© 2018 National Society of Professional Engineers, American Council of Engineering Companies, and American Society of Civil Engineers. All rights reserved.

by Engineer as to reasonableness), and for the diminished value of the Work to the extent not otherwise paid by Contractor. If any such acceptance occurs prior to final payment, the necessary revisions in the Contract Documents with respect to the Work will be incorporated in a Change Order. If the parties are unable to agree as to the decrease in the Contract Price, reflecting the diminished value of Work so accepted, then Owner may impose a reasonable set-off against payments due under Article 15. If the acceptance of defective Work occurs after final payment, Contractor shall pay an appropriate amount to Owner.

14.05 *Uncovering Work*

A. Engineer has the authority to require additional inspection or testing of the Work, whether or not the Work is fabricated, installed, or completed.

B. If any Work is covered contrary to the written request of Engineer, then Contractor shall, if requested by Engineer, uncover such Work for Engineer's observation, and then replace the covering, all at Contractor's expense.

C. If Engineer considers it necessary or advisable that covered Work be observed by Engineer or inspected or tested by others, then Contractor, at Engineer's request, shall uncover, expose, or otherwise make available for observation, inspection, or testing as Engineer may require, that portion of the Work in question, and provide all necessary labor, material, and equipment.

1. If it is found that the uncovered Work is defective, Contractor shall be responsible for all claims, costs, losses, and damages arising out of or relating to such uncovering, exposure, observation, inspection, and testing, and of satisfactory replacement or reconstruction (including but not limited to all costs of repair or replacement of work of others); and pending Contractor's full discharge of this responsibility the Owner shall be entitled to impose a reasonable set-off against payments due under Article 15.

2. If the uncovered Work is not found to be defective, Contractor shall be allowed an increase in the Contract Price or an extension of the Contract Times, directly attributable to such uncovering, exposure, observation, inspection, testing, replacement, and reconstruction. If the parties are unable to agree as to the amount or extent thereof, then Contractor may submit a Change Proposal within 30 days of the determination that the Work is not defective.

14.06 *Owner May Stop the Work*

A. If the Work is defective, or Contractor fails to supply sufficient skilled workers or suitable materials or equipment, or fails to perform the Work in such a way that the completed Work will conform to the Contract Documents, then Owner may order Contractor to stop the Work, or any portion thereof, until the cause for such order has been eliminated; however, this right of Owner to stop the Work will not give rise to any duty on the part of Owner to exercise this right for the benefit of Contractor, any Subcontractor, any Supplier, any other individual or entity, or any surety for, or employee or agent of any of them.

14.07 *Owner May Correct Defective Work*

A. If Contractor fails within a reasonable time after written notice from Engineer to correct defective Work, or to remove and replace defective Work as required by Engineer, then

Copyright© 2018 National Society of Professional Engineers, American Council of Engineering Companies, and American Society of Civil Engineers. All rights reserved.

Owner may, after 7 days' written notice to Contractor, correct or remedy any such deficiency.

B. In exercising the rights and remedies under this Paragraph 14.07, Owner shall proceed expeditiously. In connection with such corrective or remedial action, Owner may exclude Contractor from all or part of the Site, take possession of all or part of the Work and suspend Contractor's services related thereto, and incorporate in the Work all materials and equipment stored at the Site or for which Owner has paid Contractor but which are stored elsewhere. Contractor shall allow Owner, Owner's representatives, agents and employees, Owner's other contractors, and Engineer and Engineer's consultants access to the Site to enable Owner to exercise the rights and remedies under this paragraph.

C. All claims, costs, losses, and damages incurred or sustained by Owner in exercising the rights and remedies under this Paragraph 14.07 will be charged against Contractor as set-offs against payments due under Article 15. Such claims, costs, losses and damages will include but not be limited to all costs of repair, or replacement of work of others destroyed or damaged by correction, removal, or replacement of Contractor's defective Work.

D. Contractor shall not be allowed an extension of the Contract Times because of any delay in the performance of the Work attributable to the exercise by Owner of Owner's rights and remedies under this Paragraph 14.07.

ARTICLE 15—PAYMENTS TO CONTRACTOR; SET-OFFS; COMPLETION; CORRECTION PERIOD

15.01 *Progress Payments*

A. *Basis for Progress Payments*: The Schedule of Values established as provided in Article 2 will serve as the basis for progress payments and will be incorporated into a form of Application for Payment acceptable to Engineer. Progress payments for Unit Price Work will be based on the number of units completed during the pay period, as determined under the provisions of Paragraph 13.03. Progress payments for cost-based Work will be based on Cost of the Work completed by Contractor during the pay period.

B. *Applications for Payments*

1. At least 20 days before the date established in the Agreement for each progress payment (but not more often than once a month), Contractor shall submit to Engineer for review an Application for Payment filled out and signed by Contractor covering the Work completed as of the date of the Application and accompanied by such supporting documentation as is required by the Contract Documents.

2. If payment is requested on the basis of materials and equipment not incorporated in the Work but delivered and suitably stored at the Site or at another location agreed to in writing, the Application for Payment must also be accompanied by: (a) a bill of sale, invoice, copies of subcontract or purchase order payments, or other documentation establishing full payment by Contractor for the materials and equipment; (b) at Owner's request, documentation warranting that Owner has received the materials and equipment free and clear of all Liens; and (c) evidence that the materials and equipment are covered by appropriate property insurance, a warehouse bond, or other arrangements to protect Owner's interest therein, all of which must be satisfactory to Owner.

Copyright© 2018 National Society of Professional Engineers, American Council of Engineering Companies, and American Society of Civil Engineers. All rights reserved.

3. Beginning with the second Application for Payment, each Application must include an affidavit of Contractor stating that all previous progress payments received by Contractor have been applied to discharge Contractor's legitimate obligations associated with prior Applications for Payment.

4. The amount of retainage with respect to progress payments will be as stipulated in the Agreement.

C. *Review of Applications*

1. Engineer will, within 10 days after receipt of each Application for Payment, including each resubmittal, either indicate in writing a recommendation of payment and present the Application to Owner, or return the Application to Contractor indicating in writing Engineer's reasons for refusing to recommend payment. In the latter case, Contractor may make the necessary corrections and resubmit the Application.

2. Engineer's recommendation of any payment requested in an Application for Payment will constitute a representation by Engineer to Owner, based on Engineer's observations of the executed Work as an experienced and qualified design professional, and on Engineer's review of the Application for Payment and the accompanying data and schedules, that to the best of Engineer's knowledge, information and belief:

   a. the Work has progressed to the point indicated;

   b. the quality of the Work is generally in accordance with the Contract Documents (subject to an evaluation of the Work as a functioning whole prior to or upon Substantial Completion, the results of any subsequent tests called for in the Contract Documents, a final determination of quantities and classifications for Unit Price Work under Paragraph 13.03, and any other qualifications stated in the recommendation); and

   c. the conditions precedent to Contractor's being entitled to such payment appear to have been fulfilled in so far as it is Engineer's responsibility to observe the Work.

3. By recommending any such payment Engineer will not thereby be deemed to have represented that:

   a. inspections made to check the quality or the quantity of the Work as it has been performed have been exhaustive, extended to every aspect of the Work in progress, or involved detailed inspections of the Work beyond the responsibilities specifically assigned to Engineer in the Contract; or

   b. there may not be other matters or issues between the parties that might entitle Contractor to be paid additionally by Owner or entitle Owner to withhold payment to Contractor.

4. Neither Engineer's review of Contractor's Work for the purposes of recommending payments nor Engineer's recommendation of any payment, including final payment, will impose responsibility on Engineer:

   a. to supervise, direct, or control the Work;

   b. for the means, methods, techniques, sequences, or procedures of construction, or the safety precautions and programs incident thereto;

Copyright© 2018 National Society of Professional Engineers, American Council of Engineering Companies, and American Society of Civil Engineers. All rights reserved.

c. for Contractor's failure to comply with Laws and Regulations applicable to Contractor's performance of the Work;

d. to make any examination to ascertain how or for what purposes Contractor has used the money paid by Owner; or

e. to determine that title to any of the Work, materials, or equipment has passed to Owner free and clear of any Liens.

5. Engineer may refuse to recommend the whole or any part of any payment if, in Engineer's opinion, it would be incorrect to make the representations to Owner stated in Paragraph 15.01.C.2.

6. Engineer will recommend reductions in payment (set-offs) necessary in Engineer's opinion to protect Owner from loss because:

a. the Work is defective, requiring correction or replacement;

b. the Contract Price has been reduced by Change Orders;

c. Owner has been required to correct defective Work in accordance with Paragraph 14.07, or has accepted defective Work pursuant to Paragraph 14.04;

d. Owner has been required to remove or remediate a Hazardous Environmental Condition for which Contractor is responsible; or

e. Engineer has actual knowledge of the occurrence of any of the events that would constitute a default by Contractor and therefore justify termination for cause under the Contract Documents.

D. *Payment Becomes Due*

1. Ten days after presentation of the Application for Payment to Owner with Engineer's recommendation, the amount recommended (subject to any Owner set-offs) will become due, and when due will be paid by Owner to Contractor.

E. *Reductions in Payment by Owner*

1. In addition to any reductions in payment (set-offs) recommended by Engineer, Owner is entitled to impose a set-off against payment based on any of the following:

a. Claims have been made against Owner based on Contractor's conduct in the performance or furnishing of the Work, or Owner has incurred costs, losses, or damages resulting from Contractor's conduct in the performance or furnishing of the Work, including but not limited to claims, costs, losses, or damages from workplace injuries, adjacent property damage, non-compliance with Laws and Regulations, and patent infringement;

b. Contractor has failed to take reasonable and customary measures to avoid damage, delay, disruption, and interference with other work at or adjacent to the Site;

c. Contractor has failed to provide and maintain required bonds or insurance;

d. Owner has been required to remove or remediate a Hazardous Environmental Condition for which Contractor is responsible;

Copyright© 2018 National Society of Professional Engineers, American Council of Engineering Companies, and American Society of Civil Engineers. All rights reserved.

e. Owner has incurred extra charges or engineering costs related to submittal reviews, evaluations of proposed substitutes, tests and inspections, or return visits to manufacturing or assembly facilities;

f. The Work is defective, requiring correction or replacement;

g. Owner has been required to correct defective Work in accordance with Paragraph 14.07, or has accepted defective Work pursuant to Paragraph 14.04;

h. The Contract Price has been reduced by Change Orders;

i. An event has occurred that would constitute a default by Contractor and therefore justify a termination for cause;

j. Liquidated or other damages have accrued as a result of Contractor's failure to achieve Milestones, Substantial Completion, or final completion of the Work;

k. Liens have been filed in connection with the Work, except where Contractor has delivered a specific bond satisfactory to Owner to secure the satisfaction and discharge of such Liens; or

l. Other items entitle Owner to a set-off against the amount recommended.

2. If Owner imposes any set-off against payment, whether based on its own knowledge or on the written recommendations of Engineer, Owner will give Contractor immediate written notice (with a copy to Engineer) stating the reasons for such action and the specific amount of the reduction, and promptly pay Contractor any amount remaining after deduction of the amount so withheld. Owner shall promptly pay Contractor the amount so withheld, or any adjustment thereto agreed to by Owner and Contractor, if Contractor remedies the reasons for such action. The reduction imposed will be binding on Contractor unless it duly submits a Change Proposal contesting the reduction.

3. Upon a subsequent determination that Owner's refusal of payment was not justified, the amount wrongfully withheld will be treated as an amount due as determined by Paragraph 15.01.D.1 and subject to interest as provided in the Agreement.

15.02 *Contractor's Warranty of Title*

A. Contractor warrants and guarantees that title to all Work, materials, and equipment furnished under the Contract will pass to Owner free and clear of (1) all Liens and other title defects, and (2) all patent, licensing, copyright, or royalty obligations, no later than 7 days after the time of payment by Owner.

15.03 *Substantial Completion*

A. When Contractor considers the entire Work ready for its intended use Contractor shall notify Owner and Engineer in writing that the entire Work is substantially complete and request that Engineer issue a certificate of Substantial Completion. Contractor shall at the same time submit to Owner and Engineer an initial draft of punch list items to be completed or corrected before final payment.

B. Promptly after Contractor's notification, Owner, Contractor, and Engineer shall make an inspection of the Work to determine the status of completion. If Engineer does not consider the Work substantially complete, Engineer will notify Contractor in writing giving the reasons therefor.

Copyright© 2018 National Society of Professional Engineers, American Council of Engineering Companies, and American Society of Civil Engineers. All rights reserved.

C. If Engineer considers the Work substantially complete, Engineer will deliver to Owner a preliminary certificate of Substantial Completion which will fix the date of Substantial Completion. Engineer shall attach to the certificate a punch list of items to be completed or corrected before final payment. Owner shall have 7 days after receipt of the preliminary certificate during which to make written objection to Engineer as to any provisions of the certificate or attached punch list. If, after considering the objections to the provisions of the preliminary certificate, Engineer concludes that the Work is not substantially complete, Engineer will, within 14 days after submission of the preliminary certificate to Owner, notify Contractor in writing that the Work is not substantially complete, stating the reasons therefor. If Owner does not object to the provisions of the certificate, or if despite consideration of Owner's objections Engineer concludes that the Work is substantially complete, then Engineer will, within said 14 days, execute and deliver to Owner and Contractor a final certificate of Substantial Completion (with a revised punch list of items to be completed or corrected) reflecting such changes from the preliminary certificate as Engineer believes justified after consideration of any objections from Owner.

D. At the time of receipt of the preliminary certificate of Substantial Completion, Owner and Contractor will confer regarding Owner's use or occupancy of the Work following Substantial Completion, review the builder's risk insurance policy with respect to the end of the builder's risk coverage, and confirm the transition to coverage of the Work under a permanent property insurance policy held by Owner. Unless Owner and Contractor agree otherwise in writing, Owner shall bear responsibility for security, operation, protection of the Work, property insurance, maintenance, heat, and utilities upon Owner's use or occupancy of the Work.

E. After Substantial Completion the Contractor shall promptly begin work on the punch list of items to be completed or corrected prior to final payment. In appropriate cases Contractor may submit monthly Applications for Payment for completed punch list items, following the progress payment procedures set forth above.

F. Owner shall have the right to exclude Contractor from the Site after the date of Substantial Completion subject to allowing Contractor reasonable access to remove its property and complete or correct items on the punch list.

15.04 *Partial Use or Occupancy*

A. Prior to Substantial Completion of all the Work, Owner may use or occupy any substantially completed part of the Work which has specifically been identified in the Contract Documents, or which Owner, Engineer, and Contractor agree constitutes a separately functioning and usable part of the Work that can be used by Owner for its intended purpose without significant interference with Contractor's performance of the remainder of the Work, subject to the following conditions:

1. At any time, Owner may request in writing that Contractor permit Owner to use or occupy any such part of the Work that Owner believes to be substantially complete. If and when Contractor agrees that such part of the Work is substantially complete, Contractor, Owner, and Engineer will follow the procedures of Paragraph 15.03.A through 15.03.E for that part of the Work.

Copyright© 2018 National Society of Professional Engineers, American Council of Engineering Companies, and American Society of Civil Engineers. All rights reserved.

2. At any time, Contractor may notify Owner and Engineer in writing that Contractor considers any such part of the Work substantially complete and request Engineer to issue a certificate of Substantial Completion for that part of the Work.

3. Within a reasonable time after either such request, Owner, Contractor, and Engineer shall make an inspection of that part of the Work to determine its status of completion. If Engineer does not consider that part of the Work to be substantially complete, Engineer will notify Owner and Contractor in writing giving the reasons therefor. If Engineer considers that part of the Work to be substantially complete, the provisions of Paragraph 15.03 will apply with respect to certification of Substantial Completion of that part of the Work and the division of responsibility in respect thereof and access thereto.

4. No use or occupancy or separate operation of part of the Work may occur prior to compliance with the requirements of Paragraph 6.04 regarding builder's risk or other property insurance.

15.05 *Final Inspection*

A. Upon written notice from Contractor that the entire Work or an agreed portion thereof is complete, Engineer will promptly make a final inspection with Owner and Contractor and will notify Contractor in writing of all particulars in which this inspection reveals that the Work, or agreed portion thereof, is incomplete or defective. Contractor shall immediately take such measures as are necessary to complete such Work or remedy such deficiencies.

15.06 *Final Payment*

A. *Application for Payment*

1. After Contractor has, in the opinion of Engineer, satisfactorily completed all corrections identified during the final inspection and has delivered, in accordance with the Contract Documents, all maintenance and operating instructions, schedules, guarantees, bonds, certificates or other evidence of insurance, certificates of inspection, annotated record documents (as provided in Paragraph 7.12), and other documents, Contractor may make application for final payment.

2. The final Application for Payment must be accompanied (except as previously delivered) by:

   a. all documentation called for in the Contract Documents;

   b. consent of the surety, if any, to final payment;

   c. satisfactory evidence that all title issues have been resolved such that title to all Work, materials, and equipment has passed to Owner free and clear of any Liens or other title defects, or will so pass upon final payment.

   d. a list of all duly pending Change Proposals and Claims; and

   e. complete and legally effective releases or waivers (satisfactory to Owner) of all Lien rights arising out of the Work, and of Liens filed in connection with the Work.

3. In lieu of the releases or waivers of Liens specified in Paragraph 15.06.A.2 and as approved by Owner, Contractor may furnish receipts or releases in full and an affidavit of Contractor that: (a) the releases and receipts include all labor, services, material, and equipment for which a Lien could be filed; and (b) all payrolls, material and equipment

Copyright© 2018 National Society of Professional Engineers, American Council of Engineering Companies, and American Society of Civil Engineers. All rights reserved.

bills, and other indebtedness connected with the Work for which Owner might in any way be responsible, or which might in any way result in liens or other burdens on Owner's property, have been paid or otherwise satisfied. If any Subcontractor or Supplier fails to furnish such a release or receipt in full, Contractor may furnish a bond or other collateral satisfactory to Owner to indemnify Owner against any Lien, or Owner at its option may issue joint checks payable to Contractor and specified Subcontractors and Suppliers.

B. *Engineer's Review of Final Application and Recommendation of Payment*: If, on the basis of Engineer's observation of the Work during construction and final inspection, and Engineer's review of the final Application for Payment and accompanying documentation as required by the Contract Documents, Engineer is satisfied that the Work has been completed and Contractor's other obligations under the Contract have been fulfilled, Engineer will, within 10 days after receipt of the final Application for Payment, indicate in writing Engineer's recommendation of final payment and present the final Application for Payment to Owner for payment. Such recommendation will account for any set-offs against payment that are necessary in Engineer's opinion to protect Owner from loss for the reasons stated above with respect to progress payments. Otherwise, Engineer will return the Application for Payment to Contractor, indicating in writing the reasons for refusing to recommend final payment, in which case Contractor shall make the necessary corrections and resubmit the Application for Payment.

C. *Notice of Acceptability*: In support of its recommendation of payment of the final Application for Payment, Engineer will also give written notice to Owner and Contractor that the Work is acceptable, subject to stated limitations in the notice and to the provisions of Paragraph 15.07.

D. *Completion of Work*: The Work is complete (subject to surviving obligations) when it is ready for final payment as established by the Engineer's written recommendation of final payment and issuance of notice of the acceptability of the Work.

E. *Final Payment Becomes Due*: Upon receipt from Engineer of the final Application for Payment and accompanying documentation, Owner shall set off against the amount recommended by Engineer for final payment any further sum to which Owner is entitled, including but not limited to set-offs for liquidated damages and set-offs allowed under the provisions of this Contract with respect to progress payments. Owner shall pay the resulting balance due to Contractor within 30 days of Owner's receipt of the final Application for Payment from Engineer.

15.07 *Waiver of Claims*

A. By making final payment, Owner waives its claim or right to liquidated damages or other damages for late completion by Contractor, except as set forth in an outstanding Claim, appeal under the provisions of Article 17, set-off, or express reservation of rights by Owner. Owner reserves all other claims or rights after final payment.

B. The acceptance of final payment by Contractor will constitute a waiver by Contractor of all claims and rights against Owner other than those pending matters that have been duly submitted as a Claim, or appealed under the provisions of Article 17.

Copyright© 2018 National Society of Professional Engineers, American Council of Engineering Companies, and American Society of Civil Engineers. All rights reserved.

15.08 *Correction Period*

A. If within one year after the date of Substantial Completion (or such longer period of time as may be prescribed by the Supplementary Conditions or the terms of any applicable special guarantee required by the Contract Documents), Owner gives Contractor written notice that any Work has been found to be defective, or that Contractor's repair of any damages to the Site or adjacent areas has been found to be defective, then after receipt of such notice of defect Contractor shall promptly, without cost to Owner and in accordance with Owner's written instructions:

   1. correct the defective repairs to the Site or such adjacent areas;

   2. correct such defective Work;

   3. remove the defective Work from the Project and replace it with Work that is not defective, if the defective Work has been rejected by Owner, and

   4. satisfactorily correct or repair or remove and replace any damage to other Work, to the work of others, or to other land or areas resulting from the corrective measures.

B. Owner shall give any such notice of defect within 60 days of the discovery that such Work or repairs is defective. If such notice is given within such 60 days but after the end of the correction period, the notice will be deemed a notice of defective Work under Paragraph 7.17.B.

C. If, after receipt of a notice of defect within 60 days and within the correction period, Contractor does not promptly comply with the terms of Owner's written instructions, or in an emergency where delay would cause serious risk of loss or damage, Owner may have the defective Work corrected or repaired or may have the rejected Work removed and replaced. Contractor shall pay all costs, losses, and damages (including but not limited to all fees and charges of engineers, architects, attorneys, and other professionals and all court or arbitration or other dispute resolution costs) arising out of or relating to such correction or repair or such removal and replacement (including but not limited to all costs of repair or replacement of work of others). Contractor's failure to pay such costs, losses, and damages within 10 days of invoice from Owner will be deemed the start of an event giving rise to a Claim under Paragraph 12.01.B, such that any related Claim must be brought within 30 days of the failure to pay.

D. In special circumstances where a particular item of equipment is placed in continuous service before Substantial Completion of all the Work, the correction period for that item may start to run from an earlier date if so provided in the Specifications.

E. Where defective Work (and damage to other Work resulting therefrom) has been corrected or removed and replaced under this paragraph, the correction period hereunder with respect to such Work will be extended for an additional period of one year after such correction or removal and replacement has been satisfactorily completed.

F. Contractor's obligations under this paragraph are in addition to all other obligations and warranties. The provisions of this paragraph are not to be construed as a substitute for, or a waiver of, the provisions of any applicable statute of limitation or repose.

Copyright© 2018 National Society of Professional Engineers, American Council of Engineering Companies, and American Society of Civil Engineers. All rights reserved.

ARTICLE 16—SUSPENSION OF WORK AND TERMINATION

16.01 *Owner May Suspend Work*

A. At any time and without cause, Owner may suspend the Work or any portion thereof for a period of not more than 90 consecutive days by written notice to Contractor and Engineer. Such notice will fix the date on which Work will be resumed. Contractor shall resume the Work on the date so fixed. Contractor shall be entitled to an adjustment in the Contract Price or an extension of the Contract Times directly attributable to any such suspension. Any Change Proposal seeking such adjustments must be submitted no later than 30 days after the date fixed for resumption of Work.

16.02 *Owner May Terminate for Cause*

A. The occurrence of any one or more of the following events will constitute a default by Contractor and justify termination for cause:

1. Contractor's persistent failure to perform the Work in accordance with the Contract Documents (including, but not limited to, failure to supply sufficient skilled workers or suitable materials or equipment, or failure to adhere to the Progress Schedule);

2. Failure of Contractor to perform or otherwise to comply with a material term of the Contract Documents;

3. Contractor's disregard of Laws or Regulations of any public body having jurisdiction; or

4. Contractor's repeated disregard of the authority of Owner or Engineer.

B. If one or more of the events identified in Paragraph 16.02.A occurs, then after giving Contractor (and any surety) 10 days' written notice that Owner is considering a declaration that Contractor is in default and termination of the Contract, Owner may proceed to:

1. declare Contractor to be in default, and give Contractor (and any surety) written notice that the Contract is terminated; and

2. enforce the rights available to Owner under any applicable performance bond.

C. Subject to the terms and operation of any applicable performance bond, if Owner has terminated the Contract for cause, Owner may exclude Contractor from the Site, take possession of the Work, incorporate in the Work all materials and equipment stored at the Site or for which Owner has paid Contractor but which are stored elsewhere, and complete the Work as Owner may deem expedient.

D. Owner may not proceed with termination of the Contract under Paragraph 16.02.B if Contractor within 7 days of receipt of notice of intent to terminate begins to correct its failure to perform and proceeds diligently to cure such failure.

E. If Owner proceeds as provided in Paragraph 16.02.B, Contractor shall not be entitled to receive any further payment until the Work is completed. If the unpaid balance of the Contract Price exceeds the cost to complete the Work, including all related claims, costs, losses, and damages (including but not limited to all fees and charges of engineers, architects, attorneys, and other professionals) sustained by Owner, such excess will be paid to Contractor. If the cost to complete the Work including such related claims, costs, losses, and damages exceeds such unpaid balance, Contractor shall pay the difference to Owner. Such claims, costs, losses, and damages incurred by Owner will be reviewed by Engineer as

Copyright© 2018 National Society of Professional Engineers, American Council of Engineering Companies, and American Society of Civil Engineers. All rights reserved.

to their reasonableness and, when so approved by Engineer, incorporated in a Change Order. When exercising any rights or remedies under this paragraph, Owner shall not be required to obtain the lowest price for the Work performed.

F. Where Contractor's services have been so terminated by Owner, the termination will not affect any rights or remedies of Owner against Contractor then existing or which may thereafter accrue, or any rights or remedies of Owner against Contractor or any surety under any payment bond or performance bond. Any retention or payment of money due Contractor by Owner will not release Contractor from liability.

G. If and to the extent that Contractor has provided a performance bond under the provisions of Paragraph 6.01.A, the provisions of that bond will govern over any inconsistent provisions of Paragraphs 16.02.B and 16.02.D.

16.03 *Owner May Terminate for Convenience*

A. Upon 7 days' written notice to Contractor and Engineer, Owner may, without cause and without prejudice to any other right or remedy of Owner, terminate the Contract. In such case, Contractor shall be paid for (without duplication of any items):

1. completed and acceptable Work executed in accordance with the Contract Documents prior to the effective date of termination, including fair and reasonable sums for overhead and profit on such Work;

2. expenses sustained prior to the effective date of termination in performing services and furnishing labor, materials, or equipment as required by the Contract Documents in connection with uncompleted Work, plus fair and reasonable sums for overhead and profit on such expenses; and

3. other reasonable expenses directly attributable to termination, including costs incurred to prepare a termination for convenience cost proposal.

B. Contractor shall not be paid for any loss of anticipated profits or revenue, post-termination overhead costs, or other economic loss arising out of or resulting from such termination.

16.04 *Contractor May Stop Work or Terminate*

A. If, through no act or fault of Contractor, (1) the Work is suspended for more than 90 consecutive days by Owner or under an order of court or other public authority, or (2) Engineer fails to act on any Application for Payment within 30 days after it is submitted, or (3) Owner fails for 30 days to pay Contractor any sum finally determined to be due, then Contractor may, upon 7 days' written notice to Owner and Engineer, and provided Owner or Engineer do not remedy such suspension or failure within that time, terminate the contract and recover from Owner payment on the same terms as provided in Paragraph 16.03.

B. In lieu of terminating the Contract and without prejudice to any other right or remedy, if Engineer has failed to act on an Application for Payment within 30 days after it is submitted, or Owner has failed for 30 days to pay Contractor any sum finally determined to be due, Contractor may, 7 days after written notice to Owner and Engineer, stop the Work until payment is made of all such amounts due Contractor, including interest thereon. The provisions of this paragraph are not intended to preclude Contractor from submitting a Change Proposal for an adjustment in Contract Price or Contract Times or otherwise for expenses or damage directly attributable to Contractor's stopping the Work as permitted by this paragraph.

Copyright© 2018 National Society of Professional Engineers, American Council of Engineering Companies, and American Society of Civil Engineers. All rights reserved.

ARTICLE 17—FINAL RESOLUTION OF DISPUTES

17.01 *Methods and Procedures*

A. *Disputes Subject to Final Resolution*: The following disputed matters are subject to final resolution under the provisions of this article:

1. A timely appeal of an approval in part and denial in part of a Claim, or of a denial in full, pursuant to Article 12; and

2. Disputes between Owner and Contractor concerning the Work, or obligations under the Contract Documents, that arise after final payment has been made.

B. *Final Resolution of Disputes*: For any dispute subject to resolution under this article, Owner or Contractor may:

1. elect in writing to invoke the dispute resolution process provided for in the Supplementary Conditions;

2. agree with the other party to submit the dispute to another dispute resolution process; or

3. if no dispute resolution process is provided for in the Supplementary Conditions or mutually agreed to, give written notice to the other party of the intent to submit the dispute to a court of competent jurisdiction.

ARTICLE 18—MISCELLANEOUS

18.01 *Giving Notice*

A. Whenever any provision of the Contract requires the giving of written notice to Owner, Engineer, or Contractor, it will be deemed to have been validly given only if delivered:

1. in person, by a commercial courier service or otherwise, to the recipient's place of business;

2. by registered or certified mail, postage prepaid, to the recipient's place of business; or

3. by e-mail to the recipient, with the words "Formal Notice" or similar in the e-mail's subject line.

18.02 *Computation of Times*

A. When any period of time is referred to in the Contract by days, it will be computed to exclude the first and include the last day of such period. If the last day of any such period falls on a Saturday or Sunday or on a day made a legal holiday by the law of the applicable jurisdiction, such day will be omitted from the computation.

18.03 *Cumulative Remedies*

A. The duties and obligations imposed by these General Conditions and the rights and remedies available hereunder to the parties hereto are in addition to, and are not to be construed in any way as a limitation of, any rights and remedies available to any or all of them which are otherwise imposed or available by Laws or Regulations, by special warranty or guarantee, or by other provisions of the Contract. The provisions of this paragraph will be

Copyright© 2018 National Society of Professional Engineers, American Council of Engineering Companies, and American Society of Civil Engineers. All rights reserved.

as effective as if repeated specifically in the Contract Documents in connection with each particular duty, obligation, right, and remedy to which they apply.

18.04 *Limitation of Damages*

A. With respect to any and all Change Proposals, Claims, disputes subject to final resolution, and other matters at issue, neither Owner nor Engineer, nor any of their officers, directors, members, partners, employees, agents, consultants, or subcontractors, shall be liable to Contractor for any claims, costs, losses, or damages sustained by Contractor on or in connection with any other project or anticipated project.

18.05 *No Waiver*

A. A party's non-enforcement of any provision will not constitute a waiver of that provision, nor will it affect the enforceability of that provision or of the remainder of this Contract.

18.06 *Survival of Obligations*

A. All representations, indemnifications, warranties, and guarantees made in, required by, or given in accordance with the Contract, as well as all continuing obligations indicated in the Contract, will survive final payment, completion, and acceptance of the Work or termination of the Contract or of the services of Contractor.

18.07 *Controlling Law*

A. This Contract is to be governed by the law of the state in which the Project is located.

18.08 *Assignment of Contract*

A. Unless expressly agreed to elsewhere in the Contract, no assignment by a party to this Contract of any rights under or interests in the Contract will be binding on the other party without the written consent of the party sought to be bound; and, specifically but without limitation, money that may become due and money that is due may not be assigned without such consent (except to the extent that the effect of this restriction may be limited by law), and unless specifically stated to the contrary in any written consent to an assignment, no assignment will release or discharge the assignor from any duty or responsibility under the Contract.

18.09 *Successors and Assigns*

A. Owner and Contractor each binds itself, its successors, assigns, and legal representatives to the other party hereto, its successors, assigns, and legal representatives in respect to all covenants, agreements, and obligations contained in the Contract Documents.

18.10 *Headings*

A. Article and paragraph headings are inserted for convenience only and do not constitute parts of these General Conditions.

Copyright© 2018 National Society of Professional Engineers, American Council of Engineering Companies, and American Society of Civil Engineers. All rights reserved.

SUPPLEMENTARY CONDITIONS

Westwood Sanitary Sewer Replacement, Contract No. 2

TABLE OF CONTENTS

		Page
Table of Contents		00800-1
Caption and Introductory Statements		00800-3
SC-1.01	Defined Terms	00800-3
SC-1.02	Terminology	00800-3
SC-2.03	Before Starting Construction	00800-4
SC-2.05	Acceptance of Schedules	00800-4
SC-3.01	Intent	00800-5
SC-3.02	Reference Standards	00800-5
SC-3.03	Reporting and Resolving Discrepancies	00800-6
SC-4.01	Commencement of Contract Times; Notice to Proceed	00800-6
SC-4.05	Delays in Contractor's Progress	00800-6
SC-5.03	Subsurface and Physical Conditions	00800-7
SC-5.04	Differing Subsurface or Physical Conditions	00800-9
SC-5.05	Underground Facilities	00800-10
SC-5.06	Hazardous Environmental Conditions at Site	00800-14
SC-6.02	Insurance—General Provisions	00800-15
SC-6.03	Contractor's Insurance	00800-15
SC-6.04	Builder's Risk and Other Property Insurance	00800-15
SC-6.05	Property Losses; Subrogation	00800-15
SC-6.06	Receipt and Application of Property Insurance Proceeds	00800-16
SC-7.01	*Contractor's Means and Methods of Construction*	00800-16
SC-7.05	"Or-Equals"	00800-16
SC-7.06	Substitutes	00800-16
SC-7.07	Concerning Subcontractors and Suppliers	00800-17
SC-7.08	Patent Fees and Royalties	00800-17
SC-7.11	Laws and Regulations	00800-17
SC-7.13	Safety and Protection	00800-18
SC-7.16	Submittals	00800-18
SC-7.17	Contractor's General Warranty and Guarantee	00800-18
SC-7.19	Delegation of Professional Design Services	00800-19
SC-9.06	*Insurance*	00800-20
SC-10.01	Owner's Representative	00800-20
SC-10.02	Visits to Site	00800-20
SC-10.03	Resident Project Representative	00800-20
SC-10.07	Limitations on Engineer's Authority and Responsibilities	00800-22
SC-15.01	Progress Payments	00800-22

SC-15.04 Partial Use or Occupancy 00800-23
SC-15.07 Waiver of Claims 00800-23
SC-17.01 Methods and Procedures 00800-23
SC-18.01 Giving Notice 00800-24

Caption and Introductory Statements

Supplementary Conditions

These Supplementary Conditions amend or supplement the Standard General Conditions of the Construction Contract, EJCDC C-700 (2018 Edition). All provisions which are not so amended or supplemented remain in full force and effect.

Unless otherwise noted, the terms used in these Supplementary Conditions have the meanings stated in the General Conditions. Additional terms used in these Supplementary Conditions have the meanings stated below, which are applicable to both the singular and plural thereof.

The address system used in these Supplementary Conditions is the same as the address system used in the General Conditions, with the prefix "SC" added thereto.

ADDITIONS, DELETIONS AND CHANGES TO GENERAL CONDITIONS

ARTICLE 1 - DEFINITIONS AND TERMINOLOGY

SC-1.01 *Defined Terms*

SC-1.01 Add the following new paragraph immediately after Paragraph 1.01.A.22:

22.1 *Falsework*--temporary construction work on which a main work is wholly or partly built and/or supported until the main work is strong enough to support itself.

SC-1.01 Add the following new paragraph immediately after Paragraph 1.01.A.32:

32.1 *Project Manual* – the written documents prepared for, or made available for, procuring and constructing the Work, including but not limited to the Bidding Documents or other construction procurement documents, geotechnical and existing conditions information, the Agreement, bond forms, General Conditions, Supplementary Conditions, and Specifications. The contents of the Project Manual may be bound in one or more volumes.

SC-1.02 *Terminology*

SC-1.02 Add the following new sentence immediately after the last sentence in Paragraph 1.02.B:

The use of any such term or adjective is not intended to and shall not be effective to relieve the Contractor of responsibility to comply with all Laws and Regulations applicable to the performance of the Work, or to perform the Work in accordance with the provisions of Article 7, or to comply with any other provision of the Contract Documents.

ARTICLE 2 - PRELIMINARY MATTERS

SC-2.03 *Before Starting Construction*

SC-2.03 Delete Paragraph 2.03.A in its entirety and insert the following in its place:

A. *Preliminary Schedules:* Within 10 days after the Effective Date of the Agreement, Contractor shall submit to Owner and Engineer for timely review:

1. A preliminary Progress Schedule indicating the times (number of days or dates) for starting and completing the various stages of the Work, including any Milestones specified in the Contract Documents;

2. A preliminary Schedule of Submittals; and

3. A preliminary Schedule of Values for all of the Work which includes quantities and prices of items which when added together equal the Contract Price and subdivides the Work into component parts in sufficient detail to serve as the basis for progress payments during performance of the Work. Such prices will include an appropriate amount of overhead and profit applicable to each item of Work.

SC-2.05 *Acceptance of Schedules*

SC-2.05 Delete Paragraph 2.05.A in its entirety and insert the following in its place:

A. Upon Owner's, Engineer's or Contractor's request at least ten days before submission of the first Application for Payment a conference, attended by Contractor, Owner, Engineer and others as appropriate, will be held to review for acceptability to Owner as provided below the schedules submitted in accordance with paragraph 2.03.A. If a schedule is not acceptable, Contractor shall have an additional ten days to make corrections and adjustments and to complete and resubmit the schedules. Upon notice by Owner, no progress payment shall be made to Contractor until acceptable

schedules are submitted and accepted by Owner.

1. The Progress Schedule will be acceptable to Owner if it provides an orderly progression of the Work to completion within any specified Milestones and the Contract Time, and if acceptable to Engineer. Such acceptance will not impose on Owner or Engineer responsibility for the Progress Schedule, for sequencing, scheduling, or progress of the Work nor interfere with or relieve Contractor from Contractor's full responsibility therefor.

2. Contractor's Schedule of Submittals will be acceptable to Owner if acceptable to Engineer and if it provides a workable arrangement for reviewing and processing the required submittals.

3. Contractor's Schedule of Values will be acceptable to Owner as to form and substance if it is acceptable to Engineer and if it provides a reasonable allocation of the Contract Price to component parts of the Work.

ARTICLE 3 - CONTRACT DOCUMENTS: INTENT, AMENDING, REUSE

SC-3.01 *Intent*

SC-3.01 Add the following new sentence immediately after the last sentence in Paragraph 3.01.B:

Any labor, documentation, services, materials, or equipment that reasonably may be inferred from the Contract Documents or from prevailing custom or trade usage as being required to produce the indicated result will be provided whether or not specifically called for, at no additional cost to Owner.

SC-3.02 *Reference Standards*

SC-3.02.A.2 Delete Paragraph 3.02.A.2 in its entirety and insert the following in its place:

No provision of any such standard specification, manual, reference standard, or code, or any instruction of a Supplier, shall be effective to change the duties or responsibilities of Owner, Contractor, or Engineer, or any of their subcontractors, consultants, agents, or employees, from those set forth in the part of the Contract Documents prepared by or for Engineer. No such provision

or instruction shall be effective to assign to Owner, Engineer, or any of their officers, directors, members, partners, employees, agents, consultants, or subcontractors, any duty or authority to supervise or direct the performance of the work or any duty or authority to undertake responsibility inconsistent with the provisions of the part of the Contract Documents prepared by or for Engineer.

SC-3.03 *Reporting and Resolving Discrepancies*

A. *Reporting Discrepancies*

SC-3.03 Delete Sub-Paragraph 3.03.A.3 in its entirety and insert the following in its place:

3. Contractor shall not be entitled to any increase in the Contract Amount or Contract Time for any conflicts, errors, ambiguities or discrepancies in the Contract Documents that were known, or that should have been known to Contractor, or which could have been discovered by Contractor as part of its review of the bidding requirements and Contract Documents prior to bidding or its review of the Contract Documents prior to undertaking any part of the Work.

ARTICLE 4 – COMMENCEMENT AND PROGRESS OF THE WORK

SC-4.01 *Commencement of Contract Times; Notice to Proceed*

SC-4.01 Delete Paragraph 4.01.A in its entirety and insert the following in its place:

A. The Contract Times will commence to run on the day indicated in the Notice to Proceed.

SC-4.05 *Delays in Contractor's Progress*

SC-4.05 Add the following new paragraph immediately after Paragraph 4.05.G

H. Contractor must submit any Change Proposal seeking an adjustment in Contract Price or Contract Times under Paragraph 4.05 within 30 days of the commencement of the delaying, disrupting, or interfering event.

ARTICLE 5 - SUBSURFACE AND PHYSICAL CONDITIONS; HAZARDOUS ENVIRONMENTAL CONDITIONS

SC-5.03 *Subsurface and Physical Conditions*

SC-5.03.A Delete Paragraph 5.03.A in its entirety and insert the following in its place:

A. *Reports and Drawings:* The Contract Documents may identify:

1. Those soil borings, plans, drawings, surveys or other reports of explorations of subsurface conditions at or contiguous to the Site that Engineer has used in preparing the Contract Documents;

2. Those drawings of physical conditions in or relating to existing surface or subsurface structures at or contiguous to the Site, (Except Underground Facilities) that Engineer has used in preparing the Contract Documents; and

3. Technical Data contained in such *Reports and Drawings.*

The soil borings, plans, drawings, surveys, technical data, and other documents referenced in Paragraphs 5.03.A.1, 2 and 3 are collectively called "*Reports and Drawings.*"

SC-5.03.C Delete Paragraph 5.03.C in its entirety and insert the following in its place:

C. *Reliance by Contractor Not Authorized.* Contractor may not rely upon the *Reports and Drawings* referenced in 5.03.A or make any claim against Owner, Engineer, or any of Owner's or Engineer's Consultants or Subcontractors related to the *Reports and Drawings*. This limitation includes but is not limited to:

1. The accuracy or completeness of such *Reports and Drawings* for Contractor's purposes, including, but not limited to, any aspects of the means, methods, techniques, sequences, and procedures of construction to be employed by Contractor, and safety precautions and programs incident thereto; or

2. The accuracy or completeness of other data, interpretations, opinions, and information contained in, shown on, or indicated in the *Reports and Drawings*; or

3. Any Contractor interpretation of or conclusion drawn from any of the *Reports and Drawings* or any other Technical Data, data, interpretations, opinions or information referenced in the *Reports and Drawings.*

The *Reports and Drawings,* including the information contained therein, are offered to the Contractor only as information relied upon by Engineer in the preparation of the Contract Documents, and the Contractor is solely responsible for confirming actual conditions. Neither the Engineer nor the Owner, nor the Consultants or Subcontractors of either have any responsibility for any conclusion, interpretation or analysis contained therein or made by the Contractor based upon the Contractor's review of the Reports *and Drawings*.

Neither Owner nor Engineer has any responsibility for and does not warrant that the soils or water table encountered during construction will be as shown in the *Reports and Drawings*.

SC-5.03.D Delete Paragraph 5.03.D in its entirety and insert the following in its place:

D. Contractor warrants that before submitting a bid the Contractor has determined the soil and subsoil conditions, including the water table elevation and the conditions to be encountered by Contractor in the performance of the Work and that said conditions and factors have been evaluated by Contractor and incorporated into his Contract with Owner. Contractor further warrants that the Contractor is fully aware of the soil conditions, subsoil conditions, water table and all applicable State and Federal Regulations related to the excavation, removal, transportation, placement and relocation of the materials involved in the Work to be performed by the Contractor and that Contractor will complete the Work under whatever

conditions he may encounter or create without extra cost, expense to or claim against the Owner or Engineer, their Consultants or Subcontractors.

Contractor has identified all locations where the Contractor's operations are near public roadways, the properties of railroads or contiguous physical structures. Work shall not take place until Contractor has made all arrangements necessary to identify the location and/or elevation of the roadways, the properties of railroads or contiguous physical structures and foundation or appurtenances and has taken all necessary steps to protect the roadways, the properties of railroads or contiguous physical structures from damage. Contractor is solely responsible for any and all damage to roadways, the properties of railroads or contiguous physical structures and any personal injury, death or property damage or consequential damages arising from Contractor's operations.

SC-5.04 *Differing Subsurface or Physical Conditions*

SC-5.04.A Delete Paragraph 5.04.A in its entirety and insert the following in its place:

A. *Notice by Contractor*: If Contractor believes that any subsurface or physical condition that is uncovered or revealed either:

1. is of such a nature as to require a change in the Contract Documents; or

2. is of an unusual nature and differs materially from conditions ordinarily encountered and generally recognized as inherent in work of the character provided for in the Contract Documents;

then Contractor shall, within 48 hours after becoming aware thereof and before further disturbing the subsurface or physical conditions or performing any Work in connection therewith (except in an emergency as required by paragraph 7.15), notify Owner and Engineer in writing about such condition. Contractor

shall not further disturb such condition or perform any Work in connection therewith (except as aforesaid) until receipt of written order to do so. If notice as provided in the section is not given, no change in Contract Price shall be considered or allowed.

SC-5.04.B Delete Paragraph 5.04.B in its entirety and insert the following in its place:

B. *Engineer's Review*: After receipt of written notice as required by Paragraph 5.04.A, Engineer will review the information provide by Contractor. If Engineer, in Engineer's sole discretion, determines that additional explorations and/or tests are needed to evaluate Contractor's belief that there are differing subsurface or physical conditions, then Contractor, at Contractor's sole expense, shall promptly undertake those additional explorations and/or tests, and provide the results to Engineer. Engineer will then review the information provided by Contractor along with any other information Engineer believes is pertinent, and advise Owner in writing (with a copy to Contractor) of Engineer's findings, conclusions and recommendations.

If after receipt of written notice as required by Paragraph 5.04.A, Engineer, in Engineer's sole discretion, determines that additional explorations and/or tests are not needed to evaluate Contractor's belief that there are differing subsurface or physical conditions, Engineer will review the information provided by Contractor, along with any other information Engineer believes is pertinent, and advise Owner in writing (with copy to Contractor) of Engineer's findings, conclusions and recommendations.

Owner reserves the right at its own expense to undertake additional exploration and/or testing. This reservation in no way waives the responsibility of the Contractor to undertake additional explorations and/or tests, if required, as set forth above.

SC-5.05 *Underground Facilities*

SC-5.05.A Delete Paragraph 5.05.A in its entirety and insert the following in its place:

A. *Contractor's Responsibilities*: The information and data shown or indicated in the Contract Documents with respect to existing Underground Facilities at or adjacent to the Site is based on

information and data furnished to Owner or Engineer by the owners of such Underground Facilities, including Owner, or by others.

1. The Underground Facilities shown on or indicated in the Contract Documents are located according to the information available to the Engineer at the time of the preparation of the Contract Documents. Neither the Engineer nor the Owner guarantee the accuracy or completeness of any such information or data, including but not limited to information provided by the Owner;

2. The Contractor is solely responsible for identifying the actual location of all Underground Facilities and shall verify the location and/or elevations of the Underground Facilities prior to undertaking construction;

3. At all locations where the Contractor's operations are near, will cross or contact Underground Facilities, no part of the Work shall commence until Contractor has made all arrangements necessary to identify the location and/or elevation of the Underground Facility, including contacting MISS DIG, has notified the owner of the Underground Facility, and has taken all necessary steps to protect the Underground Facility from damage.

4. The cost of all of the following will be included in the Contract Price, and Contractor shall have full responsibility for:

    a. reviewing and checking all information and data regarding Underground Facilities at the Site;

    b. complying with applicable state and local utility damage prevention Laws and Regulations;

    c. locating all Underground Facilities shown or indicated in the Contract Documents;

    d. verifying the actual location of those Underground Facilities shown or indicated in the Contract Documents as being within the area affected by the

Work, by exposing such Underground Facilities during the course of construction;

e. coordination of the Work with the owners of such Underground Facilities, including Owner, during construction;

f. the safety and protection of all such Underground Facilities and related above ground structures, including but not limited to shoring, bracing, supporting and maintenance of all Underground Facilities and related above ground structures affected by the Contractor's operations;

g. repairing any damage to Underground Facilities and related above ground structures resulting from the Work; and

h. any personal injury, death or property damage or consequential damages arising from Contractor's Work.

5. In the event of the interruption of or damage to an Underground Facility as the result of Contractor's operations, the Contractor shall immediately notify the Underground Facility owner and shall take all steps necessary to cooperate with and assist the Underground Facility owner in the restoration and repair of the Underground Facility. Said repair work shall be continuous and shall not result in any delay of the Project or increased cost or expense to Owner, or claim against Owner, Engineer or their Consultants.

SC-5.05.B Delete Paragraph 5.05.B in its entirety and insert the following in its place:

B. *Notice by Contractor*: If an Underground Facility is uncovered or revealed at or adjacent to the Site which was not shown or indicated in the Contract Documents, Contractor shall, promptly after becoming aware thereof and before further disturbing conditions affected thereby or performing any Work in connection therewith (except in an emergency as required paragraph 7.15), identify the owner of such Underground Facility

and give written notice to that owner and to Owner and Engineer.

SC-5.05.C Delete Paragraph 5.05.C in its entirety and insert the following in its place:

C. *Engineer's Review*: Engineer will review the Underground Facility and determine the extent, if any, to which a change is required in the Contract Documents to reflect and document the consequences of the existence or location of the Underground Facility. If Engineer concludes that a change in the Contract Documents is required, Engineer shall prepare recommendations to the Owner regarding the Contractor's resumption of Work in connection with the Underground Facility in question; determine the extent, if any, to which a change is required in the Drawings or Specifications to reflect and document the consequences of the existence or location of the Underground Facility; and advise Owner in writing of Engineer's findings, conclusions, and recommendations. At all times, Contractor shall be solely responsible for the safety and protection of such Underground Facility.

SC-5.05.F. Delete Paragraph 5.05.F.1 in its entirety and insert the following in its place:

F. *Possible Price and Times Adjustment*

1. Contractor shall be entitled to an equitable adjustment in the Contract Price or Contract Times, to the extent that they are attributable to the existence or location of any Underground Facility that was not shown or indicated in the Contract Documents, subject to the following:

a. Contractor did not know of and could not reasonably have been expected to be aware of or to have anticipated the existence or actual location of the Underground Facility in question;

b. With respect to Work that is paid for on a unit price basis, any adjustment in Contract Price will be subject to the provisions of Paragraph 13.03;

c. Contractor's entitlement to an adjustment of the Contract Times is subject to the provisions of Paragraphs 4.05.D and 4.05.E; and

d. Contractor gave the notice required in Paragraph 5.05.B.

SC-5.06 *Hazardous Environmental Conditions at Site*

SC-5.06.A Delete Paragraph 5.06.A in its entirety and insert the following in its place:

A. *Reports and Drawings*: The Supplementary Conditions identify:

1. The following reports regarding Hazardous Environmental Conditions at the Site were utilized by the Engineer in the preparation of the Contract Documents:

a. *None*

2. The following drawings regarding Hazardous Environmental Conditions at the Site were utilized by the Engineer in the preparation of the Contract Documents:

a. *None*

3. Technical Data contained in such *Reports and Drawings.*

SC-5.06.B Delete Paragraph 5.06.B in its entirety and insert the following in its place:

B. *Reliance by Contractor Not Authorized:* Contractor may not make any Claim against Owner, Engineer or the Consultants of either with respect to:

1. The completeness of such reports, drawings and/or Technical Data, for Contractor's purposes, including, but not limited to, any aspects of the means, methods, techniques, sequences and procedures of construction to be employed by Contractor, the cost of Work and safety precautions and programs incident thereto; or

2. The accuracy of any Technical Data, or any other data, interpretations, opinions and information contained in such reports or shown or indicated on such drawings; or

3. Any Contractor interpretation of or conclusion drawn from any

such report, drawing or Technical Data.

ARTICLE 6 - BONDS AND INSURANCE

6.02 *Insurance—General Provisions*

SC-6.02 Delete Paragraph 6.02.A in its entirety and insert the following in its place:

A. Owner and Contractor shall obtain and maintain insurance as required in this Article and in the Insurance Specification.

SC-6.02 Delete Paragraphs 6.02.B through 6.02.N in their entirety and replace with Insurance Specification.

6.03 *Contractor's Insurance*

SC-6.03 Delete Paragraph 6.03.A in its entirety and insert the following in its place:

A. *Required* Insurance: Contractor shall purchase and maintain Worker's Compensation, Commercial General Liability, and other insurance pursuant to the specific requirements of the Insurance Specification.

SC-6.03 Delete Paragraphs 6.03.B through 6.03.C in their entirety and replace with Insurance Specification.

6.04 *Builder's Risk and Other Property Insurance*

SC-6.04 Delete the last sentence of Paragraph 6.04.A and insert the following in its place:

The specific requirements applicable to the builder's risk insurance are set forth in the Insurance Specification.

SC-6.04 Delete Paragraphs 6.04.B through 6.04.E in their entirety and replace with Insurance Specification.

6.05 *Property Losses; Subrogation*

SC-6.05 Delete Paragraphs 6.05.A through 6.05.D in their entirety and replace with Insurance Specification.

6.06 *Receipt and Application of Property Insurance Proceeds*

SC-6.06 Delete Paragraphs 6.06.A through 6.06.C in their entirety and replace with Insurance Specification.

ARTICLE 7 - CONTRACTOR'S RESPONSIBILITIES

SC-7.01 *Contractor's Means and Methods of Construction*

SC-7.01.A Add the following new sentence immediately after the last sentence in 7.01.A:

Nothing in the design, specifications or Contract Documents shall be deemed to constitute a specific means, method, technique, sequence, or procedure of construction. Contractor shall be solely responsible for ensuring that the completed Work conforms accurately to the Contract Documents.

SC-7.05 *"Or-Equals"*

SC-7.05.A Add the following sub-paragraph immediately after Paragraph 7.05.A.1.b.2:

3) the item will be functionally equal to the named item of material or equipment. Contractor warrants and assumes sole responsibility for the adequacy, performance and functioning of the "or-equal" material or equipment.

SC-7.06 *Substitutes*

SC-7.06.A.3.f Add the following sub-paragraph immediately following paragraph 7.06.A.3.d:

f. Contractor warrants that, if approved and incorporated into the Work, the "substitute item" will be functionally equal to the named item of material or equipment. Contractor assumes sole responsibility for the adequacy, performance and functioning of the "substitute" item of material or equipment.

SC-7.07 *Concerning Subcontractors and Suppliers*

SC-7.07.D Delete Paragraph 7.07.D in its entirety and replace with the following paragraph:

D. No later than two (2) business days after the bid opening, the Contractor shall submit to the Owner and Engineer for acceptance a list of the names and addresses of the Contractor's Subcontractors, Suppliers and such other individuals and entities as the Owner requests.

SC-7.07 Add the following sub-paragraphs immediately following paragraph 7.07.M:

N. Contractor shall require all Subcontractors, prior to commencement of any Work by the Subcontractor, to secure and keep in force the insurance coverages set forth in and required by the Insurance Specification.

O. Contractor shall be fully responsible to Owner and Engineer for all acts and omissions of the Subcontractors and Suppliers, whether initially or as a replacement, performing or furnishing any of the Work just as Contractor is responsible for Contractor's own acts and omissions.

SC-7.08 *Patent Fees and Royalties*

SC-7.08.B Delete paragraph 7.08.B in its entirety.

SC-7.11 *Laws and Regulations*

SC-7.11.D Add the following new paragraph immediately after Paragraph 7.11.C:

D. Contractor shall be solely responsible for compliance with all Federal and State Occupational Safety and Health Act ("OSHA") requirements related to the Work and the Site, including, if applicable, the requirements of the Michigan Occupational Safety and Health Act ("MIOSHA"). Neither Owner nor Engineer shall have any responsibility for construction site safety or OSHA or MIOSHA compliance. Contractor will indemnify and hold harmless Owner and Engineer from all claims, costs, fees, fines, penalties and expenses (including but not limited to all fees and charges of engineers, architects, attorneys and other professionals and all court, administrative proceeding, and dispute resolution costs) related in any way to claims related

to construction site safety, OSHA or MIOSHA violations or charges.

SC-7.13 *Safety and Protection*

SC-7.13.A Amend the first sentence of Paragraph 7.13.A to read as follows:

A. Contractor shall be solely responsible for initiating, maintaining and supervising all safety precautions and programs in connection with the Work, including but not limited to the enforcement of safety precautions and programs of all Subcontractors.

SC-7.13.D Amend Paragraph 7.13.D to read as follows:

E. All damage, injury, or loss to any property referred to in Paragraph 7.13.C.2 or 7.13.C.3 caused, directly or indirectly, in whole or in part, by Contractor, any Subcontractor, Supplier, or any other individual or entity directly or indirectly employed by any of them to perform any of the Work, or anyone for whose acts any of them may be liable, shall be remedied by Contractor at its expense.

SC-7.16 *Submittals*

SC-7.16.B.1 Amend paragraph 7.16.B.1.a to read as follows:

a. Contractor shall submit to Engineer for approval eight (8) copies of all shop drawings.

SC-7.16.B.2 Amend paragraph 7.16.B.2.a to read as follows:

a. Contractor shall submit to Engineer for approval eight (8) duplicates of each Sample.

SC-7.16.E Add the following new paragraph immediately after Paragraph 7.16.E.1.d:

e. Contractor shall submit to Engineer for approval eight (8) duplicates of each submittal.

SC-7.17 *Contractor's General Warranty and Guarantee*

SC-7.17.A Delete Paragraph 7.17.A in its entirety and replace with the following paragraph:

Contractor warrants and guarantees to Owner that all Work will be in accordance with the Contract Documents and will not be defective. Engineer and its officers, directors, members, partners, employees, agents, consultants, and subcontractors shall be entitled to rely on Contractor's warranty and guarantee. Contractor's warranty and guaranty that all Work will be in accordance with the Contract Documents and will not be defective includes but is not limited to all materials and equipment incorporated into the Work. Unless a longer duration is required by the Project Specifications, Contractor's warranty and guaranty that all Work will be in accordance with the Contract Documents and will not be defective will extend for at least one year after the date of Substantial Completion.

SC-7.17.D.8 Amend paragraph 7.17.D.8 to read as follows:

8. Any inspection, test, review, or approval by Engineer, the Resident Project Representative (if one is assigned to the Site), or by others;

SC-7.17.D.9 Amend Paragraph 7.17.D.9 to read as follows:

9. Any correction of defective Work by Owner; or

SC-7.17.D.10 Add the following new paragraph immediately after Paragraph 7.17.D.9:

10. Any acceptance by Owner, or any failure to do so.

SC-7.19 *Delegation of Professional Design Services*

SC-7.19.B Add the following new sentence immediately after the last sentence in 7.19.B:

The design professional must be licensed in the state or states where the Project is located.

SC-7.19.D Delete Paragraph 7.19.D in its entirety and replace with the following paragraph:

Owner and Engineer shall be entitled to rely upon the adequacy, accuracy, and completeness of the services, certifications, drawings, calculations, specifications, Submittals, and approvals performed or provided by the design professionals retained or employed by Contractor under an Owner-delegated design, subject to the professional standard of care and the performance and design criteria stated in the Contract Documents.

ARTICLE 9 – OWNER'S RESPONSIBILITIES

SC-9.06 *Insurance*

SC-9.06.A. Delete Paragraph 9.06.A in its entirety and replace with the following paragraph:

A. Owner's responsibilities, if any, with respect to purchasing and maintaining liability and property insurance are set forth in the Insurance Specifications.

ARTICLE 10 - ENGINEER'S STATUS DURING CONSTRUCTION

SC-10.01 *Owner's Representative*

SC-10.01.A Delete Paragraph 10.01.A in its entirety and insert the following in its place:

A. Engineer will be Owner's representative during the construction period. The Engineer will have authority to act on behalf of the Owner only to the extent provided in the Contract Documents. The authority and responsibilities of the Engineer as set forth in the Contract Documents shall not be restricted, extended or otherwise modified without the written consent of the Engineer and the Owner. Nothing in the Contract Documents shall create for the benefit of the Contractor, any Subcontractor, Supplier or other individual or entity, any contractual relationship between Engineers and any such Contractor, Subcontractor, Supplier or other individual or entity.

SC-10.02 *Visits to Site*

SC-10.02.A Amend Paragraph 10.02.A by striking the following words from the first sentence:

"at intervals appropriate to the various stages of construction"

SC-10.03 *Resident Project Representative*

SC-10.03.C Add the following new paragraphs immediately after Paragraph 10.03.C:

C. If Engineer furnishes a Resident Project Representative (RPR), the RPR

will be Engineer's employee or agent at the Site. The RPR's authority and responsibility is expressly limited to making observations of the progress that has been made and the quality of the various aspects of Contractor's executed Work, and reporting same to Engineer. RPR will not be required to make exhaustive or continuous observations or inspections on the Site to check the quality or quantity of the Work. RPR's efforts will be directed toward providing for Owner a greater degree of confidence that the completed Work will conform generally to the Contract Documents. In addition to the limitations set forth in Paragraph 10.07, The RPR does not have the authority or responsibility to:

1. Authorize any deviation from the Contract Documents or substitution of materials or equipment (including "or-equal" items).

2. Exceed limitations of Engineer's authority as set forth in the Contract Documents.

3. Undertake any of the responsibilities of Contractor, Subcontractors, Suppliers, or Contractor's superintendent.

4. Advise on, issue directions relative to, or assume control over any aspect of the means, methods, techniques, sequences or procedures of Contractor's work.

5. Advise on, issue directions regarding, or assume control over safety practices, precautions, and programs in connection with the activities or operations of Owner or Contractor.

6. Participate in specialized field or laboratory tests or inspections conducted off-site by others except as specifically authorized by Engineer.

7. Accept Shop Drawing or Sample submittals.

8. Authorize Owner to occupy the Project in whole or in part.

9. Interpret for Contractor or Owner any provision of the Contract Documents.

10. Stop the Work for any reason.

SC-10.07 *Limitations on Engineer's Authority and Responsibilities.*

SC-10.07.B Add the following sentence immediately after the last sentence in Paragraph 10.07.B:

Engineer may not stop the work or interfere with the progress of the Work. No decision made by the Engineer in good faith either to exercise or not exercise any authority or responsibility delegated to Engineer in the Contract Documents or the undertaking, exercise, or performance of any authority or responsibility by Engineer shall be construed as interference with the progress of the Work. Engineer shall have no authority or responsibility to recommend alternate or possible safety activities or changes for the safety of the project, Contractor, Subcontractors, Suppliers, Owner, employees, third persons or their property.

SC-10.07.F Add the following new paragraph immediately after Paragraph 10.07.E:

F. Engineer will not be responsible for Contractor's failure to pay Subcontractors, Suppliers, employees, taxes, fees, permits, patent fees, copyright fees, royalties, licenses or monies due to any individual or entity.

SC-15.01 *Progress Payments*

SC-15.01.C Delete Paragraph 15.01.C.3.a and insert the following in its place:

a. Inspections made to check the quality or the quantity of the Work as it has been performed have been exhaustive, extended to every aspect of the Work in progress, or involved detailed inspections of the Work; or

SC-15.01.C Delete the period at the end of the sentence in Paragraph 15.01.C.4.e and insert the following in its place:

, or

SC-15.01.C Add the following new paragraphs immediately after Paragraph 15.01.C.4.e:

f. for Contractor's failure to construct the Work or any part of the Work in conformance with the Contract Documents, or

g. for defective Work.

SC-15.04 *Partial Use or Occupancy*

SC-15.04 Delete Paragraph 15.04.A.4 in its entirety and insert the following in its place:

4. No use or occupancy or separate operation of part of the Work may occur prior to compliance with the requirements of the Insurance Specifications regarding builder's risk or other property insurance.

SC-15.07 *Waiver of Claims*

SC-15.07.A Delete Paragraph 15.07.A in its entirety and insert the following in its place:

A. The making of final payment will not constitute a waiver by Owner of claims or rights against Contractor. Owner expressly reserves claims and rights arising (1) from unsettled Liens, (2) from defective Work, (3) from Contractor's failure to comply with the Contract Documents or the terms of any special guarantees specified therein, (4) from outstanding Claims by Owner, (5) from Contractor's continuing obligations under the Contract Documents, and (6) from late completion by Contractor, including without limitation liquidated damages or other damage.

ARTICLE 17 – FINAL RESOULTION OF DISPUTES

SC-17.01 *Methods and Procedures*

SC-17.01.B Delete Paragraph 17.01.B.1 in its entirety and insert the following in its place:

1. At Owner's sole option, Owner may demand in writing arbitration of the dispute;

SC-17.01.C Add the following new paragraph immediately after Paragraph 17.01.B

SC-17.01.C *Arbitration of Claims at Election of Owner*

1. If the Owner elects in writing to demand arbitration as set forth in Paragraph 17.01.1, the dispute will be decided by arbitration in accordance with the rules of the American Arbitration Association in effect as of the Effective Date of the Agreement

2. The demand for arbitration will be filed in writing with the Contractor

and with the selected arbitrator, and a copy will be sent to Engineer for information.

3. The award rendered by the arbitrator(s) shall be consistent with the agreement of the parties, in writing, and include: (i) a concise breakdown of the award; and (ii) a written explanation of the award specifically citing the Contract Document provisions deemed applicable and relied on in making the award.

4. The award will be final. Judgment may be entered upon it in any court having jurisdiction thereof, and it will not be subject to modification or appeal except as provided by the controlling law governing vacating or modifying an arbitration award.

5. The fees and expenses of the arbitrators and any arbitration service shall be shared equally by Owner and Contractor.

ARTICLE 18 – MISCELLANEOUS

18.01 *Giving Notice*

SC-18.01 Delete Paragraph 18.01.A.3 in its entirety.

INSURANCE SPECIFICATION

Insurance Required to be Purchased and Maintained by the Contractor

Contractor shall comply with all requirements of this Insurance Specification. Contractor shall purchase and maintain (i.e. keep in force) insurance which conforms to the requirements of this Insurance Specification.

1.1 Insurance—General Provisions

1.1.1 Contractor shall obtain and maintain insurance as required in this Insurance Specification.

1.1.2 All insurance required by the Contract to be purchased and maintained by Contractor shall be obtained from insurance companies that are duly licensed or authorized, in the state or jurisdiction in which the Project is located, to issue insurance policies for the required limits and coverage's. Unless a different standard is indicated in the Supplementary Conditions, all companies that provide insurance policies required under this Contract shall have an A.M. Best rating of A-VII or better.

1.1.3 Contractor shall deliver to Owner, with copies to each named insured and additional insured (as identified in this Insurance Specification, in the Supplementary Conditions, or elsewhere in the Contract), certificates of insurance establishing that Contractor has obtained and is maintaining the policies, coverage's, and endorsements required by the Contract. Upon request by Owner or any other insured, Contractor shall also furnish other evidence of such required insurance, including but not limited to copies of policies and endorsements, and documentation of applicable self-insured retentions and deductibles. Contractor may block out (redact) any confidential premium or pricing information contained in any policy or endorsement furnished under this provision.

1.1.4 Failure of Owner to demand such certificates or other evidence of the Contractor's full compliance with these insurance requirements, or failure of Owner to identify a deficiency in compliance from the evidence provided, shall not be construed as a waiver of the Contractor's obligation to obtain and maintain such insurance.

1.1.5 If Contractor does not purchase or maintain all of the insurance required of Contractor by the Contract, Contractor shall notify the other party in writing of such failure to purchase prior to the start of the Work, or of such failure to maintain prior to any change in the required coverage.

1.1.6 If Contractor has failed to obtain and maintain required insurance, Owner may exclude the Contractor from the Site, impose an appropriate set-off against payment, and exercise Owner's termination rights under Article 16 of the General Conditions of the Contract.

1.1.7 Without prejudice to any other right or remedy, if Contractor has failed to obtain required insurance, Owner may elect to obtain equivalent insurance to protect Owner's interests at the expense of the Contractor, and the Contract Price shall be adjusted accordingly.

1.1.8 Owner does not represent that insurance coverage and limits established in this Contract necessarily will be adequate to protect Contractor or Contractor's interests.

1.1.9 The insurance and insurance limits required herein shall not be deemed as a limitation on Contractor's liability under the indemnities granted to Owner and other individuals and entities in the Contract.

1.2 Contractor's Insurance - Liability

1.2.1 Owner's & Contractor's Protective Liability: Contractor shall purchase and maintain an Owner's & Contractor's Protective Liability Policy ("OCP" Policy). The OCP policy shall name the Owner, the Engineer, their consultants, agents, and employees, as the insureds (hereinafter collectively called the "named insureds"). The OCP policy will protect the named insureds for any actual or alleged liability arising out of the work performed by the Contractor, the Subcontractor(s), or Suppliers, on this Project. The OCP policy will provide primary, non-contributing coverage.

1.2.2 Workers' Compensation and Employer's Liability: Contractor shall purchase and maintain workers' compensation and employer's liability insurance for:

1.2.2.1 Claims under workers' compensation, disability benefits, and other similar employee benefit acts.

1.2.2.2 United States Longshoreman and Harbor Workers' Compensation Act and Jones Act coverage (if applicable).

1.2.2.3 Claims for damages because of bodily injury, occupational sickness or disease, or death of Contractor's employees (by stop-gap endorsement in monopolist worker's compensation states).

1.2.2.4 Foreign voluntary worker compensation (if applicable).

1.2.3 Commercial General Liability—Claims Covered: Contractor shall purchase and maintain commercial general liability insurance, covering all operations by or on behalf of Contractor, on an occurrence basis, against:

1.2.3.1 Claims for damages because of bodily injury, sickness or disease, or death of any person other than Contractor's employees.

1.2.3.2 Claims for damages insured by reasonably available personal injury liability coverage.

1.2.3.3 Claims for damages, other than to the Work itself, because of injury to or destruction of tangible property wherever located, including loss of use resulting therefrom.

1.2.4 Commercial General Liability—Form and Content: Contractor's commercial liability policy shall be written on a 1996 (or later) ISO commercial general liability form (occurrence form) and include the following coverage's and endorsements:

1.2.4.1 Products and completed operations coverage: Such insurance shall be maintained for three years after final payment.

1.2.4.2 Contractor shall furnish Owner and each other additional insured (as identified in the Supplementary Conditions or elsewhere in the Contract) evidence of continuation of such insurance at final payment and three years thereafter.

1.2.4.3 Blanket contractual liability coverage, to the extent permitted by law, including but not limited to coverage of Contractor's contractual indemnity obligations in Paragraph 7.18.

1.2.4.4 Premises/operations liability.

1.2.4.5 Personal and advertising injury.

1.2.4.6 Broad form property damage coverage.

1.2.4.7 Severability of interest (the CGL policy shall apply to each named insured as if that named insured was the only named insured and the policy shall apply separately to each insured against whom claim is made or suit is brought).

1.2.4.8 Underground, explosion, and collapse coverage.

1.2.4.9 Personal injury coverage, including employees (with no exclusions pertaining to employment).

1.2.4.10 Additional insured endorsements that include both ongoing operations and products and completed operations coverage through ISO Endorsements CG 20 10 10 01 and CG 20 37 10 01 (together); or CG 20 10 07 04 and CG 20 37 07 04 (together); or their equivalent.

1.2.4.11 For design professional additional insureds, ISO Endorsement CG 20 32 07 04, "Additional Insured—Engineers, Architects or Surveyors Not Engaged by the Named Insured" or its equivalent.

1.2.5 Automobile liability: Contractor shall purchase and maintain comprehensive automobile liability insurance against claims for damages because of bodily injury or death of any person or property damage arising out of the ownership, maintenance, or use of any motor vehicle, including owned, non-owned, and hired motor vehicles. In light of standard policy provisions concerning (a) loading and unloading, and (b) definitions pertaining to motor vehicles licensed for road use versus unlicensed or self-propelled construction equipment, it is recommended that the comprehensive automobile liability insurance policy and the commercial general liability policy be written by the same insurance carrier, though not necessarily in one the policy. The comprehensive automobile liability policy shall be written on an occurrence basis.

1.2.6 Umbrella or excess liability: Contractor shall purchase and maintain umbrella or excess liability insurance written over the underlying employer's liability, commercial general liability, aviation liability and automobile liability insurance described in the paragraphs above and in Section 1.2.10 below. The coverage afforded shall be at least as set for in Section 1.5.6. But if no box is checked in Section 1.5.6, then the umbrella/excess liability coverage limits will be $2,000,000 per occurrence and $2,000,000 general aggregate. The umbrella or excess liability insurance policy(ies) shall be an occurrence policy(ies)

1.2.7 Contractor's pollution liability insurance: Contractor shall purchase and maintain a policy covering third-party injury and property damage claims, including clean-up costs, as a result of pollution conditions arising from Contractor's operations and completed operations. This insurance shall be maintained for no less than three years after final completion.

1.2.8 Railroad Protective Liability: Contractor shall purchase and maintain a Railroad Protective Liability policy, where such an exposure exists, to provide coverage in the name of each railroad company having jurisdiction over rights-of-way across which Work under the Contract Documents is to be performed. The form of the policy and the limits of liability shall be determined by the railroad company(ies) involved.

1.2.9 Contractor's professional liability insurance: If Contractor will provide or furnish professional services under this Contract, through a delegation of professional design services or otherwise, then Contractor shall purchase and maintain applicable professional liability insurance. This insurance shall provide protection against claims arising out of performance of professional design or related services, and caused by a negligent error, omission, or act for which the insured party is legally liable. It shall be maintained throughout the duration of the Contract and for a minimum of two years after Substantial Completion. If such professional design services are performed by a Subcontractor, and not by Contractor itself, then the requirements of this paragraph may be satisfied

through the purchasing and maintenance of such insurance by such Subcontractor.

1.2.10 Aviation Liability Insurance: If required on this project as indicated by a check mark in Section 1.5.10, Contractor shall procure and maintain for the duration of the Contract insurance against claims for injuries to persons or damage to property which may arise from or in connection with the ownership, maintenance or use of Manned or Unmanned Aerial Vehicles, including but not limited to drone(s).

1.2.10.1 Minimum Scope and Limit of Insurance: Aviation Liability Insurance on an "occurrence" basis, including products and completed operations, property damage, bodily injury with limits no less than $1,000,000 per occurrence, and $2,000,000 in the aggregate. This coverage may also be provided by endorsement to the Contractor's Commercial General Liability policy.

1.3 The policies of insurance required to be purchased and maintained by the Contractor shall:

1.3.1 Additional insureds: The Contractor's commercial general liability, automobile liability, umbrella or excess, pollution liability policies and aviation liability insurance, shall include and list as additional insureds the Owner and Engineer, and the following individuals and entities:

Name	Address	Telephone
City of Muskegon	933 Terrace Street, Muskegon, MI 49440	231-724-6707
Prein&Newhof,	3355 Evergreen Drive NE, Grand Rapids, MI	616-364-8491

The additional insured coverage shall include coverage for the respective officers, directors, members, partners, employees, agents, consultants, and subcontractors of each and every additional insureds; and the insurance afforded to these additional insureds shall provide primary coverage for all claims covered thereby (including as applicable those arising from both ongoing and completed operations) on a non-contributory basis. Contractor shall obtain all necessary endorsements to support these requirements. Each additional insured endorsement shall state that each additional insured is entitled to the same rights as the named insured in the event of cancellation, including but not limited to prior notice of cancellation.

1.3.2 Deductible Liability: Any and all deductibles in the polices described in this Insurance Specification shall be assumed by, for the account of, and be the sole

responsibility of Contractor. The amount of any deductible is subject to approval by the Owner.

1.3.3 **Insurance will be primary**: The insurance required to be purchased and maintained by the Contractor under this Insurance Specification shall be primary (i.e. pay first) as respects any insurance, self-insurance or self-retention maintained by the Owner, Engineer, and any other insureds. Any insurance, self-insurance or self-retention maintained by the Owner, Engineer, or any other insureds, shall be in excess of the insurance purchased and maintained by the Contractor under this Insurance Specification, and shall not contribute with it.

1.3.4 **Coverages:** Include at least the specific coverage's provided in this Insurance Specification.

1.3.5 **Minimum Limits:** Be written for not less than the limits of liability provided in this Insurance Specification and in the Supplementary Conditions, or required by Laws or Regulations, whichever is greater.

1.3.6 **Notice of Cancellation:** Contain a provision or endorsement that the coverage afforded will not be canceled, materially changed, or renewal refused until at least ten (10) days prior written notice has been given to Contractor. Within three (3) days of receipt of any such written notice, Contractor shall provide a copy of the notice to Owner, Engineer, and each other insured under the policy.

1.3.7 **Duration:** Remain in effect at least until final payment (and longer if expressly required in this Insurance Specification or the Supplementary Conditions) and at all times thereafter when Contractor may be correcting, removing, or replacing defective Work as a warranty or correction obligation, or otherwise, or returning to the Site to conduct other tasks arising from the Contract Documents.

1.3.8 Be appropriate for the Work being performed and provide protection to Contractor, Owner, Engineer, and any other additional insured, from claims that may arise out of or result from Contractor's, Sub-contractor's or Supplier's performance of the Work, or any individual or entity directly or indirectly employed by any of them to perform any of the Work or anyone for whose acts any of them may be liable.

1.3.9 The coverage requirements for specific policies of insurance must be met by such policies, and not by reference to excess or umbrella insurance provided in other policies.

1.4 Contractor's Insurance - Property

Builder's Risk: If required on this project as indicated by a check mark in Section 1.5.7, Contractor shall purchase and maintain builder's risk insurance upon the Work on a completed value basis, in the amount of the full insurable replacement cost thereof (subject to such deductible amounts as may be provided in this Insurance Specification,

or the Supplementary Conditions or required by Laws and Regulations). This insurance shall:

1.4.1.1 Include the interests of Owner, Contractor, Subcontractors, Engineer, and the officers, directors, partners, employees, agents, consultants and subcontractors, of any of them, and any other individuals or entities required by this Insurance Specification and/or the Supplementary Conditions to be insured under such builder's risk policy. Each of whom shall be listed as a named insured (the parties required to be insured shall collectively be referred to as "insureds").

1.4.1.2 Be written on a builder's risk "all risk" policy form that shall at least include insurance for physical loss or damage to the Work, temporary buildings, falsework, and materials and equipment in transit, and shall insure against at least the following perils or causes of loss: fire; lightning; windstorm; riot; civil commotion; terrorism; vehicle impact; aircraft; smoke; theft; vandalism and malicious mischief; mechanical breakdown, boiler explosion, and artificially generated electric current; earthquake; volcanic activity, and other earth movement; flood; collapse; explosion; debris removal; demolition occasioned by enforcement of Laws and Regulations; water damage (other than that caused by flood); and such other perils or causes of loss as may be specifically required by this Insurance Specification and/or the Supplementary Conditions. If insurance against mechanical breakdown, boiler explosion, and artificially generated electric current; earthquake; volcanic activity, and other earth movement; or flood, are not commercially available under builder's risk policies, by endorsement or otherwise, such insurance may be provided through other insurance policies acceptable to Owner and Contractor.

1.4.1.3 Cover, as insured property, at least the following: (a) the Work and all materials, supplies, machinery, apparatus, equipment, fixtures, and other property of a similar nature that are to be incorporated into or used in the preparation, fabrication, construction, erection, or completion of the Work, including Owner-furnished or assigned property; (b) spare parts inventory required within the scope of the Contract; and (c) temporary works which are not intended to form part of the permanent constructed Work but which are intended to provide working access to the Site, or to the Work under construction, or which are intended to provide temporary support for the Work under construction, including scaffolding, form work, fences, shoring, falsework, and temporary structures.

1.4.1.4 Cover expenses incurred in the repair or replacement of any insured property (including but not limited to fees and charges of engineers and architects).

1.4.1.5 Extend to cover damage or loss to insured property while in temporary storage at the Site or in a storage location outside the Site (but not including property stored at the premises of a manufacturer or Supplier).

1.4.1.6 Extend to cover damage or loss to insured property while in transit.

1.4.1.7 Allow for partial occupation or use of the Work by Owner, such that those portions of the Work that are not yet occupied or used by Owner shall remain covered by the builder's risk insurance.

1.4.1.8 Allow for the waiver of the insurer's subrogation rights, as set forth below.

1.4.1.9 Provide primary coverage for all losses and damages caused by the perils or causes of loss covered.

1.4.1.10 Not include a co-insurance clause.

1.4.1.11 Include an exception for ensuing losses from physical damage or loss with respect to any defective workmanship, design, or materials exclusions.

1.4.1.12 Include performance/hot testing and start-up.

1.4.1.13 Be maintained in effect until final payment is made unless otherwise agreed to in writing by Owner, Contractor, and Engineer, with 30 days written notice to each other Insured.

1.4.2 **Notice of Cancellation or Change**: All the policies of insurance (and the certificates or other evidence thereof) required to be purchased and maintained in accordance with this section shall contain a provision or endorsement that the coverage afforded will not be canceled or materially changed or renewal refused until at least ten (10) days prior written notice has been given to the purchasing policyholder. Within three (3) days of receipt of any such written notice, the purchasing policyholder shall provide a copy of the notice to each other insured.

1.4.3 **Deductibles**: Contractor shall pay for costs not covered because of the application of a policy deductible.

1.4.4 **Partial Occupancy or Use by Owner**: If Owner will occupy or use a portion or portions of the Work prior to Substantial Completion of all the Work as provided in Paragraph 15.04 of the General Conditions of the Contract, then Owner, through Contractor, will provide notice of such occupancy or use to the builder's risk insurer. The builder's risk insurance shall not be canceled or permitted to lapse on account of any such partial use or occupancy; rather, those portions of the Work that are occupied or used by Owner may come off the builder's risk policy, while those portions of the Work not yet occupied or used by Owner shall remain covered by the builder's risk insurance.

1.4.5 **Additional Insurance**: If Contractor elects to obtain other special insurance to be included in or supplement the builder's risk or property insurance policies provided under this section, it may do so at Contractor's expense.

1.4.6 **Insurance of Other Property**: If the express insurance provisions of the Contract do not require or address the insurance of a property item or interest, such as tools, construction equipment, or other personal property owned by Contractor, a Subcontractor, or an employee of Contractor or a Subcontractor, then the entity or

individual owning such property item will be responsible for deciding whether to insure it, and if so in what amount.

1.4.7 Waiver of Rights: All policies purchased in accordance with this Section 1.4, expressly including the builder's risk policy, shall contain provisions to the effect that in the event of payment of any loss or damage the insurers will have no rights of recovery against any insureds thereunder, or against Engineer or its consultants, or their officers, directors, members, partners, employees, agents, consultants, or subcontractors. Owner and Contractor waive all rights against each other and the respective officers, directors, members, partners, employees, agents, consultants, and subcontractors of each and any of them, for all losses and damages caused by, arising out of, or resulting from any of the perils or causes of loss covered by such policies and any other property insurance applicable to the Work; and, in addition, waive all such rights against Engineer, its consultants, all Subcontractors, all individuals or entities identified in this Insurance Specification, or the Supplementary Conditions as insureds, and the officers, directors, members, partners, employees, agents, consultants, and subcontractors of each and any of them, under such policies for losses and damages so caused. None of the above waivers shall extend to the rights that any party making such waiver may have to the proceeds of insurance held by Owner or Contractor as trustee or fiduciary, or otherwise payable under any policy so issued.

1.4.8 Sub-Contractors Waiver of Rights

Contractor shall be responsible for assuring that the agreement under which a Subcontractor performs a portion of the Work contains provisions whereby the Subcontractor waives all rights against Owner, Contractor, all individuals or entities identified in this Insurance Specification or the Supplementary Conditions, as insureds, the Engineer and its consultants, and the officers, directors, members, partners, employees, agents, consultants, and subcontractors of each and any of them, for all losses and damages caused by, arising out of, relating to, or resulting from any of the perils or causes of loss covered by builder's risk insurance and any other property insurance applicable to the Work.

1.4.9 Receipt and Application of Property Insurance Proceeds

Any insured loss under the builder's risk and other policies of insurance required by this section will be adjusted and settled with the named insured that purchased the policy. Such named insured shall act as fiduciary for the other insureds, and give notice to such other insureds that adjustment and settlement of a claim is in progress. Any other insured may state its position regarding a claim for insured loss in writing within 15 days after notice of such claim.

Proceeds for such insured losses may be made payable by the insurer either jointly to multiple insureds, or to the named insured that purchased the policy in its own right and as fiduciary for other insureds, subject to the requirements of any applicable mortgage clause. A named insured receiving insurance proceeds under the builder's risk and other policies of insurance required by this section shall distribute such proceeds in

accordance with such agreement as the parties in interest may reach, or as otherwise required under the dispute resolution provisions of the Contract or applicable Laws and Regulations.

If no other special agreement is reached, the damaged Work shall be repaired or replaced, the money so received applied on account thereof, and the Work and the cost thereof covered by Change Order, if needed.

1.5 Minimum limits

1.5.1 The minimum limits for the insurance required by this Insurance Specification shall provide coverage for not less than the following amounts or greater where required by Laws or Regulations:

1.5.2 Owner's & Contractor's Protective Liability Policy

1.5.2.1	Each Occurrence	$1,000,000
1.5.2.2	General – Aggregate	$2,000,000

1.5.3 Contractor's Commercial General Liability Policy

1.5.3.1	General – Aggregate	$2,000,000
1.5.3.2	Products – Completed Operations Aggregate	$2,000,000
1.5.3.3	Personal and Advertising Injury	$1,000,000
1.5.3.4	Each Occurrence	$1,000,000
1.5.3.5	Fire damage	$50,000
1.5.3.6	Medical Expense	$5,000

1.5.4 Comprehensive Automobile Liability Policy (In accordance with Michigan's No Fault Statute)

1.5.4.1 Combined Single Limit of $1,000,000

1.5.5 Worker's Compensation and Employer's Liability Policy

1.5.5.1	Michigan		Statutory Limits
1.5.5.2	Employer's Liability		
	1.5.5.2.1	Each accident	$ 500,000
	1.5.5.2.2	Disease – each employee	$ 500,000
	1.5.5.2.3	Disease – policy limit	$ 500,000
1.5.5.3	Federal, if applicable (e.g. FELA,		Statutory

	Longshoreman's, etc. . . .)	Limits

1.5.5 Excess or Umbrella Liability Policy

Unless increased limits are required as checked below, the limits shall be:

1.5.6.1	General Aggregate	$2,000,000
1.5.6.2	Each Occurrence	$2,000,000

Owner may select increased limits for this project as checked below; otherwise, the above limits shall apply if neither below option is checked:

<u>Option One</u>	☐ ☐	
1.5.6.1	General Aggregate	$5,000,000
1.5.6.2	Each Occurrence	$5,000,000
<u>Option Two</u>	☐ ☐	
1.5.6.1	General Aggregate	$10,000,000
1.5.6.2	Each Occurrence	$10,000,000

1.5.7	Builder's Risk "all risk" policy	Full Replacement Cost
	☐ Check if required	
1.5.8	Contractor's Pollution Liability Policy	$1,000,000
1.5.9	Railroad Protective Liability	$
	☐ Check if required	$
1.5.10	Aviation Liability Insurance	
	☐ Check if required	
	1.5.10.1 General – Aggregate	$2,000,000
	1.5.10.2 Products – Completed Operations Aggregate	$2,000,000
	1.5.10.4 Each Occurrence	$1,000,000
1.5.11	Other insurance	
	☐ Check if required (List Type)	$

OP ID: JF

CERTIFICATE OF LIABILITY INSURANCE

DATE (MM/DD/YYYY)
_

THIS CERTIFICATE IS ISSUED AS A MATTER OF INFORMATION ONLY AND CONFERS NO RIGHTS UPON THE CERTIFICATE HOLDER. THIS CERTIFICATE DOES NOT AFFIRMATIVELY OR NEGATIVELY AMEND, EXTEND OR ALTER THE COVERAGE AFFORDED BY THE POLICIES BELOW. THIS CERTIFICATE OF INSURANCE DOES NOT CONSTITUTE A CONTRACT BETWEEN THE ISSUING INSURER(S), AUTHORIZED REPRESENTATIVE OR PRODUCER, AND THE CERTIFICATE HOLDER.

IMPORTANT: If the certificate holder is an ADDITIONAL INSURED, the policy(ies) must be endorsed. If SUBROGATION IS WAIVED, subject to the terms and conditions of the policy, certain policies may require an endorsement. A statement on this certificate does not confer rights to the certificate holder in lieu of such endorsement(s).

PRODUCER		CONTACT NAME:	
-	Phone:	PHONE (A/C, No, Ext):	FAX (A/C, No):
-	Fax:	E-MAIL ADDRESS:	
-		PRODUCER CUSTOMER ID #: _	
-			

INSURED	INSURER(S) AFFORDING COVERAGE	NAIC #
Owner's Name and Address	INSURER A : INSURANCE COMPANY _ AM BEST FINANCIAL	
-	INSURER B :	
-	INSURER C :	
	INSURER D :	
	INSURER E :	
	INSURER F :	

COVERAGES **CERTIFICATE NUMBER:** **REVISION NUMBER:**

THIS IS TO CERTIFY THAT THE POLICIES OF INSURANCE LISTED BELOW HAVE BEEN ISSUED TO THE INSURED NAMED ABOVE FOR THE POLICY PERIOD INDICATED. NOTWITHSTANDING ANY REQUIREMENT, TERM OR CONDITION OF ANY CONTRACT OR OTHER DOCUMENT WITH RESPECT TO WHICH THIS CERTIFICATE MAY BE ISSUED OR MAY PERTAIN, THE INSURANCE AFFORDED BY THE POLICIES DESCRIBED HEREIN IS SUBJECT TO ALL THE TERMS, EXCLUSIONS AND CONDITIONS OF SUCH POLICIES. LIMITS SHOWN MAY HAVE BEEN REDUCED BY PAID CLAIMS.

INSR LTR	TYPE OF INSURANCE	ADDL INSR	SUBR WVD	POLICY NUMBER	POLICY EFF (MM/DD/YYYY)	POLICY EXP (MM/DD/YYYY)	LIMITS	
	GENERAL LIABILITY						EACH OCCURRENCE	$ 1,000,000
--	COMMERCIAL GENERAL LIABILITY						DAMAGE TO RENTED PREMISES (Ea occurrence)	$
-	CLAIMS-MADE / OCCUR						MED EXP (Any one person)	$
-	X Owner's & Contractor's Prot						PERSONAL & ADV INJURY	$
-							GENERAL AGGREGATE	$ 2,000,000
	GEN'L AGGREGATE LIMIT APPLIES PER:						PRODUCTS - COMP/OP AGG	$
	POLICY / PRO-JECT / LOC							$
	AUTOMOBILE LIABILITY						COMBINED SINGLE LIMIT (Ea accident)	$
	ANY AUTO						BODILY INJURY (Per person)	$
	ALL OWNED AUTOS						BODILY INJURY (Per accident)	$
	SCHEDULED AUTOS						PROPERTY DAMAGE (Per accident)	$
	HIRED AUTOS							$
	NON-OWNED AUTOS							$
	UMBRELLA LIAB / OCCUR						EACH OCCURRENCE	$
	EXCESS LIAB / CLAIMS-MADE						AGGREGATE	$
	DEDUCTIBLE							$
	RETENTION $							$
	WORKERS COMPENSATION AND EMPLOYERS' LIABILITY Y / N						WC STATU-TORY LIMITS / OTH-ER	
	ANY PROPRIETOR/PARTNER/EXECUTIVE OFFICER/MEMBER EXCLUDED? **(Mandatory in NH)** If yes, describe under DESCRIPTION OF OPERATIONS below	N / A					E.L. EACH ACCIDENT	$
							E.L. DISEASE - EA EMPLOYEE	$
							E.L. DISEASE - POLICY LIMIT	$

DESCRIPTION OF OPERATIONS / LOCATIONS / VEHICLES (Attach ACORD 101, Additional Remarks Schedule, if more space is required)

CERTIFICATE HOLDER	CANCELLATION
-	**SHOULD ANY OF THE ABOVE DESCRIBED POLICIES BE CANCELLED BEFORE THE EXPIRATION DATE THEREOF, NOTICE WILL BE DELIVERED IN ACCORDANCE WITH THE POLICY PROVISIONS.**
Contractor's Name and Address	AUTHORIZED REPRESENTATIVE

© 1988-2009 ACORD CORPORATION. All rights reserved.

SAMPLE

OP ID: JF

CERTIFICATE OF LIABILITY INSURANCE

DATE (MM/DD/YYYY)
_

THIS CERTIFICATE IS ISSUED AS A MATTER OF INFORMATION ONLY AND CONFERS NO RIGHTS UPON THE CERTIFICATE HOLDER. THIS CERTIFICATE DOES NOT AFFIRMATIVELY OR NEGATIVELY AMEND, EXTEND OR ALTER THE COVERAGE AFFORDED BY THE POLICIES BELOW. THIS CERTIFICATE OF INSURANCE DOES NOT CONSTITUTE A CONTRACT BETWEEN THE ISSUING INSURER(S), AUTHORIZED REPRESENTATIVE OR PRODUCER, AND THE CERTIFICATE HOLDER.

IMPORTANT: If the certificate holder is an ADDITIONAL INSURED, the policy(ies) must be endorsed. If SUBROGATION IS WAIVED, subject to the terms and conditions of the policy, certain policies may require an endorsement. A statement on this certificate does not confer rights to the certificate holder in lieu of such endorsement(s).

PRODUCER		CONTACT NAME:	
-	Phone:	PHONE (A/C, No, Ext):	FAX (A/C, No):
-	Fax:	E-MAIL ADDRESS:	
-		PRODUCER CUSTOMER ID #: _	
-		INSURER(S) AFFORDING COVERAGE	NAIC #
INSURED Contractor's Name and Address		INSURER A : INSURANCE COMPANY _ AM BEST FINANCIAL	
-		INSURER B :	
-		INSURER C :	
		INSURER D :	
		INSURER E :	
		INSURER F :	

COVERAGES **CERTIFICATE NUMBER:** **REVISION NUMBER:**

THIS IS TO CERTIFY THAT THE POLICIES OF INSURANCE LISTED BELOW HAVE BEEN ISSUED TO THE INSURED NAMED ABOVE FOR THE POLICY PERIOD INDICATED. NOTWITHSTANDING ANY REQUIREMENT, TERM OR CONDITION OF ANY CONTRACT OR OTHER DOCUMENT WITH RESPECT TO WHICH THIS CERTIFICATE MAY BE ISSUED OR MAY PERTAIN, THE INSURANCE AFFORDED BY THE POLICIES DESCRIBED HEREIN IS SUBJECT TO ALL THE TERMS, EXCLUSIONS AND CONDITIONS OF SUCH POLICIES. LIMITS SHOWN MAY HAVE BEEN REDUCED BY PAID CLAIMS.

INSR LTR	TYPE OF INSURANCE	ADDL INSR	SUBR WVD	POLICY NUMBER	POLICY EFF (MM/DD/YYYY)	POLICY EXP (MM/DD/YYYY)	LIMITS	
-	**GENERAL LIABILITY**						EACH OCCURRENCE	$ 1,000,000
	X- COMMERCIAL GENERAL LIABILITY						DAMAGE TO RENTED PREMISES (Ea occurrence)	$ 100,000
	CLAIMS-MADE X OCCUR						MED EXP (Any one person)	$ 5,000
							PERSONAL & ADV INJURY	$ 1,000,000
							GENERAL AGGREGATE	$ 2,000,000
	GEN'L AGGREGATE LIMIT APPLIES PER:						PRODUCTS - COMP/OP AGG	$ 2,000,000
	POLICY X PRO-JECT LOC							$
-	**AUTOMOBILE LIABILITY**						COMBINED SINGLE LIMIT (Ea accident)	$ 1,000,000
	X ANY AUTO						BODILY INJURY (Per person)	$
	X ALL OWNED AUTOS						BODILY INJURY (Per accident)	$
	X SCHEDULED AUTOS						PROPERTY DAMAGE (Per accident)	$
	X HIRED AUTOS							$
	X NON-OWNED AUTOS							$
-	X **UMBRELLA LIAB** X OCCUR						EACH OCCURRENCE	$ 2,000,000
	EXCESS LIAB CLAIMS-MADE						AGGREGATE	$ 2,000,000
	DEDUCTIBLE							$
	RETENTION $							$
-	**WORKERS COMPENSATION AND EMPLOYERS' LIABILITY** Y / N						X WC STATU-TORY LIMITS OTH-ER	
	ANY PROPRIETOR/PARTNER/EXECUTIVE OFFICER/MEMBER EXCLUDED? **(Mandatory in NH)** If yes, describe under DESCRIPTION OF OPERATIONS below	N / A					E.L. EACH ACCIDENT	$ 500,000
							E.L. DISEASE - EA EMPLOYEE	$ 500,000
							E.L. DISEASE - POLICY LIMIT	$ 500,000
-	**Builder's Risk "ALL RISK" PROPERTY**						**CONTENTS**	**Full Replacement Cost**
	POLLUTION LIABILITY							**$1,000,000**

DESCRIPTION OF OPERATIONS / LOCATIONS / VEHICLES (Attach ACORD 101, Additional Remarks Schedule, if more space is required)

Name of Additional Insured

CERTIFICATE HOLDER	CANCELLATION
-	**SHOULD ANY OF THE ABOVE DESCRIBED POLICIES BE CANCELLED BEFORE THE EXPIRATION DATE THEREOF, NOTICE WILL BE DELIVERED IN ACCORDANCE WITH THE POLICY PROVISIONS.**
Owner's Name and Address	**AUTHORIZED REPRESENTATIVE**

SAMPLE

© 1988-2009 ACORD CORPORATION. All rights reserved.

[Intentionally left blank]

SECTION 2

SPECIFICATIONS FOR EXCAVATING, TRENCHING, & BACKFILLING FOR UTILITIES

2.01 DESCRIPTION OF WORK

The work shall consist of furnishing all materials, equipment, and labor for excavating, trenching, and backfilling for utilities. The work also shall include the necessary clearing, sheeting and shoring, boring and jacking, dewatering, pipe embedment, and other appurtenant work.

The work shall be performed in accordance with the specifications and drawings, the MDOT 2012 Standard Specifications for Construction and the following specifications.

2.02 CLEARING, BRUSHING & TREE REMOVAL

2.02.01 General

The Contractor shall perform all clearing, brushing, and tree removal required for the proposed construction. Where indicated on the drawings for a specific area, that area shall be completely cleared in accordance with Sections 201 and 202 of the MDOT 2012 Standard Specifications for Construction. The Contractor shall notify the Engineer 48 hours (two working days) prior to commencement of clearing, brushing and tree removal. Clearing and brushing shall be confined to the limits of the right-of-way or easements unless otherwise directed and shall be kept to a practicable minimum.

Trees marked "Remove" on the drawings shall be taken down and removed from the right-of-way in a manner that does not endanger the adjoining property or persons or traffic using the right-of-way. Unless approved otherwise by the Engineer, stumps of trees are to be removed. All stump removal, shall be considered included in the major items of work to the project.

Selective pruning of trees will be permitted to allow operation of the Contractor's equipment. Trees shall be pruned neatly, and the scars from pruning or other damage by the Contractor's equipment shall be covered with a preservative.

2.02.02 Preservation of Trees

Because of the special concern for preservation of trees, all trees six (6) inches in diameter and larger, measured at a point 4 1/2' above the ground line at the base of the tree, which are to be removed have been marked on the drawings. Where there is more than one tree that has grown from a common stump, each tree is measured as a separate tree. All other trees are to be preserved unless written permission for

removal is obtained from the Owner and/or the Engineer. Where tunneling is necessary to preserve a tree, it shall be included in the major items of work. Trees that may have to be tunneled may or may not be specified on the drawings. Where tunneling is necessary, excavation may have to be done by hand to prevent damage to the tree or to its roots. When tunneling or excavating is done close to a tree to be preserved, every effort shall be made to preserve the main roots.

2.02.03 Disposal of Debris

All trees, brush, and stumps from clearing and brushing operations shall be disposed of by the Contractor by hauling from the site, or other suitable means approved by the Engineer. Burning of debris will be allowed if approved by the Engineer and Owner. The Contractor shall obtain the necessary burning permits and shall comply with the safety regulations required.

2.02.04 Measurement & Payment

The cost of all clearing, brushing, tunneling, and protection of trees which are left standing shall be considered included in the major items of work unless specific items have been provided in the Proposal in which case the prices shall be payment in full for performing this work as specified herein. All tree preservation shall be included in the major items of work to the project. Trees will be measured at a point 4-1/2' above the ground line at the base of the tree. Where more than one tree has grown from a common stump, each tree is measured as a separate tree. Trees six (6) inches in diameter and smaller will not be considered pay items.

2.03 REMOVAL OF SURFACE IMPROVEMENTS

Surface improvements such as sidewalks, improved lawns, drives, curb and gutter, and all types of pavement shall be removed just prior to excavating or trenching operations. All improvements shall be cut at the expected trench width prior to excavating using suitable equipment which does not damage the improvement outside of the trench area.

Concrete and bituminous pavement and drives shall be cut with a pavement cutting saw. The depth of the cut shall be the full depth of the pavement. Pavement crushers or breakers of any type are prohibited unless specifically authorized by the Engineer. Pavement which is removed shall not become mixed with backfill material. Power equipment may be used for pavement removal, provided that damage is not caused to improvements which are to remain.

Removal of surface improvements shall be included in the major items of work and no specific payment will be made therefore unless specific Proposal items are provided, in which case the prices bid shall be payment in full for performing this work as specified herein.

2.04 EXISTING SOIL / SUBSURFACE CONDITIONS

Where provided, soil borings are shown on the drawings only as information for use by the Engineer in preparing the contract documents. The Contractor is solely responsible for confirming actual soil conditions and depth of the water table.

2.05 EXISTING UNDERGROUND UTILITIES & STRUCTURES

2.05.01 Location

No less than three (3) working days prior to excavating, the Contractor is to call "MISS DIG" at 1-800-482-7171 or 811. Existing utilities are shown only at their approximate locations. The Contractor shall be responsible for determining their exact elevations and location in the field. The Contractor shall notify the owners of all underground utilities before starting any work. House sewer connections, water and gas services, and other utility lines may not be indicated on the drawings. However, the Contractor shall make every effort to locate all underground utilities from information obtained from the utility owner or by prospecting in advance of trench excavation.

2.05.02 Replacement

Certain underground utilities such as sewers may require removal and subsequent replacement in lieu of supporting or bracing during the proposed construction, or the Contractor may elect this option when temporary provisions to maintain essential services have been previously approved by the Engineer.

Unless otherwise specified, any utilities removed during the proposed construction shall be replaced by the Contractor. Materials and installation shall be equal to or better than original construction in every way. Salvaged materials may be reused when they are in good condition, and a satisfactory installation can be accomplished in the judgment of the Engineer.

Replacement of existing utilities shall be considered included in the major items of work unless specific items have been provided in the Proposal, in which case the prices bid shall be payment in full for performing this work as specified herein.

2.05.03 Relocation

Should any pipe or other existing utility require raising or lowering or moving to another location because of interference with the pipe or structure being constructed under these specifications, such changes which in the opinion of the Engineer are necessary shall be made by the Contractor unless otherwise specified. Relocation of existing utilities shall be included in the major items of work unless specific items are provided in the Proposal.

2.05.04 Reconnection

Where lateral services, house connections, or other pipe lines require reconnection to the proposed utility, as is the case when an existing utility is being reconstructed, the Contractor shall make these connections as specified or as shown on the drawings. All costs for making these connections, including provisions for maintaining flows and providing temporary service during the proposed construction, shall be included in the major items of work unless specific items are provided in the Proposal.

2.05.05 Utilities to be Abandoned

When pipes, conduits, sewers, or other structures are removed from the trench leaving dead ends in the ground, such ends shall be fully plugged or sealed with brick and mortar by the Contractor. Abandoned structures such as manholes or chambers shall be entirely removed unless otherwise specified or shown on the drawings.

All materials from abandoned utilities which can be readily salvaged shall be removed from the excavation by the Contractor and stored on the site or loaded on the Owner's truck as directed by the Engineer. Owner shall have first claim to salvageable materials. The Contractor is responsible to dispose of salvageable materials not desired to be kept by the Owner.

All costs for abandoning utilities and for removing and salvaging materials, when required, shall be considered included in the major items of work unless specific items have been provided in the Proposal, in which case the prices bid shall be payment in full for performing this work as specified herein.

2.06 EXCAVATING & TRENCHING

2.06.01 General

Excavating and trenching operations shall at all times be conducted in a safe, orderly manner using methods and equipment designed and suited to the intended use by personnel experienced in the work being performed.

None of the requirements or provisions specified herein or shown on the drawings shall nullify or restrict any safety provisions required by any regulation or law governing the protection and/or safety of persons or property.

2.06.02 Width of Trench

The width of the trench shall be ample to permit the pipe to be laid and joined properly and the pipe embedment material and backfill to be placed and compacted as specified. Trenches shall be of sufficient extra width when required as will permit the convenient placing of trench supports, sheeting, and bracing.

2.06.02.01 Width of Trench for Rigid Pipe

In order to limit excessive loads on rigid pipe, the maximum width of trench for pipe 36 inches and larger in diameter shall not be more than twice the nominal diameter. For smaller sizes of pipe, the maximum width of trench shall be not more than 3 feet greater than the nominal diameter of the pipe except as otherwise specified or directed. The above limiting restrictions on trench width apply from outside bottom of pipe to outside top of pipe.

Where the width of trench within these limits exceeds the maximum limit specified, the Contractor shall install a heavier class of pipe or use other means to provide additional load-carrying capacity at no additional cost to the Owner. Any changes in class of pipe or other variation shall be approved in writing by the Engineer before the work progresses.

When the trench width above the top of the pipe is appreciably greater then that which is reasonably required by project conditions in the judgment of the Engineer, any additional cost for backfill material, surface restoration, or other items that are the result of such excess width shall be borne by the Contractor.

2.06.02.02 Width of Trench for Flexible Pipe

Unless otherwise specified or approved by the Engineer, a minimum trench width of at least two (2) feet on each side of the pipe for placement of select embedment material will be required.

2.06.03 Excavating to Grade

The trench shall be excavated to a depth required for the proper installation of the pipe and placing of the pipe embedment material as specified.

Any part of the bottom of the trench excavated below the specified subgrade shall be refilled with approved materials compacted to 95% of maximum unit weight in accordance with MDOT procedures at no additional cost to the Owner. If additional excavation is required to correct unstable foundation conditions, payment will be made as specified in Section 2.08.

2.06.04 Sheeting, Shoring, Bracing, & Shelving

2.06.04.01 General

The Contractor shall brace or slope back the sides of all excavations in accordance with current MIOSHA regulations. The Contractor shall be responsible for compliance to such regulations and for the design, installation, and maintenance of all excavation safety measures.

2.06.04.02 Measurement & Payment

Unless otherwise specified in the Proposal, the costs incurred in the installation of bracing, sheeting, shoring, and shelving shall be included in the unit price bid for the work being performed.

Payment for sheeting left in place where directed by the Engineer shall be negotiated with the Contractor in accordance with the contract provisions for extra work unless specific items have been provided in the Proposal.

2.06.05 Rock Excavation

2.06.05.01 General

Wherever the word rock is used in these specifications, it shall mean boulders, solid ledge rock, and other minerals geologically placed and of a hardness when first exposed of 3 or greater in scales of mineral hardness, which in the opinion of the Engineer requires continuous use of drilling and blasting or special power equipment for its removal.

Soft disintegrated rock which can be removed with a power-operated excavator or with hand tools and loose, shaken, or previously blasted rock and broken stone in rock fillings shall not be classified as rock, nor will it be included in measurements for payment.

2.06.05.02 Hardness

The Engineer will determine the hardness of the material or minerals in question. The following accepted hardness will be used as a guide in the field for specific situations:

Gypsum - hardness of 2
Fingernail - hardness of approximately 2-1/2
Calcite - hardness of 3
Copper Coin - hardness of approximately 3
Brass Pin - hardness of approximately 3

A mineral with a hardness of 3 will scratch a copper coin and can be scratched with a brass pin. Determinations of hardness which cannot readily be determined in the field shall be resolved by laboratory analysis of the material in question.

2.06.05.03 Blasting

Where blasting is necessary, the Contractor shall obtain the required permits and licenses at his own expense. This work shall be done with due regard to the safety of workmen, other people, and public and private property. The method of covering blasts, amounts of charges used, and the general procedure for doing this work shall

conform to the standard practice and shall meet all requirements of local ordinances and other regulations and shall be subject to the approval of the Engineer.

2.06.05.04 Clearance

Rock shall be removed to provide a clearance for all pipes, appurtenances, or structures of at least eight (8) inches below, and a minimum of eight (8) inches on each side of the pipe, appurtenance, or structure.

The specified minimum clearances are the minimum clear distance which will be permitted between any part of the pipe or appurtenances being laid and any part, point, or projection of the rock.

2.06.05.05 Measurement

Only boulders of 1 cubic yard or greater in volume that cannot be removed with power excavating equipment or rock as defined herein will be measured for payment. Measurements of rock will be made by the Engineer after rock is removed from the excavation by measuring the trench before the pipe is installed.

The cross sectional area will be measured at 25 foot intervals or closer if required to accurately measure the trench. The maximum depth which will be measured for payment shall be from the top of the rock formation to the specified subgrade for the pipe embedment material. The maximum width of trench to be considered for payment shall be as follows:

1. Below outside top of pipe, maximum width shall be the outside diameter of the pipe bell plus 12 inches but not less than 30 inches.

2. From outside top of pipe to top of rock formation, maximum width shall be computed based on a 5 on 1 slope vertically for the sides of the trench.

The volume will be computed by the Engineer using the method of average end areas based on measurements of rock actually removed subject to the maximum limits specified.

2.06.05.06 Basis of Payment

Rock excavation shall be paid for at the contract price per cubic yard, which price shall be payment in full for completing all work as specified herein including removal and disposal of the rock.

If a unit price has not been established in the Proposal, payment to the Contractor will be based on the contract provisions for extra work.

2.06.06 Dewatering

The Contractor shall provide and maintain adequate dewatering equipment to remove and dispose of all surface and ground water including water or sewage from exposed sewers or water mains, from all excavations and trenches, or other parts of the work. Each excavation shall be kept dry during the preparation of the subgrade and continually thereafter until the structure to be built or the installation of the pipe line is completed to such extent that no damage from hydrostatic pressure, flotation, or other cause will result.

Where work is in soil containing an excessive amount of water, the Contractor shall provide, install, and maintain suitable well points or wells connected to manifolds or reliable pumping equipment, or other suitable dewatering methods, and shall so operate the dewatering system to insure proper construction of the work. If the Contractor elects to use a trench underdrain or similar dewatering system, he shall receive prior approval of the Engineer as to location and installation methods for this type of system. The Contractor shall make every effort to prevent sand, sediment, or debris from entering any existing pipe line or conduit which he may use for drainage purposes. The repair or cleaning of drainage structures made necessary by the Contractor's operations shall be performed by and at the expense of the Contractor. Arrangements for discharge of ground water into any public sewer shall be previously approved by the Engineer and Owner of the receiving sewer.

Dewatering including the use of stone or gravel for dewatering purposes when required will not be paid for separately but shall be included in the contract price for the major items of work.

The Contractor shall limit his dewatering operation to the minimum time and depth required for construction. The Contractor will be required to furnish temporary water service and/or provide potable water at the direction of the Engineer to property owners whose wells are affected by the dewatering operations.

2.07 BORING & JACKING

2.07.01 General

Where so specified on the drawings, railroad tracks, streets, or other obstructions to be crossed by utilities shall be bored and/or jacked as hereinafter specified. These specifications describe the general method of conducting the boring and jacking operations and set forth minimum conditions. The location and details of the proposed installation will be shown on the Drawings.

Unless otherwise specified, the Contractor shall be responsible for obtaining any permits required for the work under the right-of-way, or other facility to be crossed, and shall carry out the details of his work in a manner that will fully meet the requirements of the authority having jurisdiction over the facility affected. No interruption of traffic will be permitted, and the Contractor shall take all precautions to that effect.

2.07.02 Casing Method

When the casing method is specified, a casing pipe shall be jacked into place and a carrier pipe shall then be installed in the casing pipe. The casing pipe shall be jacked into place by approved methods that will provide accurate alignment and grade and that will allow the carrier pipe to be installed within the casing at the specified alignment and grade.

The carrier pipe shall be joined together to form a continuous run through the casing. It shall be supported on wooden shoes or blocks which shall be securely fastened to each end of each piece of pipe or as recommended by the pipe manufacturer. The carrier pipe shall then be drawn or shoved through the casing. Junction with pipes of other materials at each end shall be made as shown on the Drawings. After the pipe has been inspected and accepted, the annular space between the pipe and the casing shall be filled with materials approved by the Owner, such as, peastone or flowable fill. After the casing has been filled, the ends of the casing shall be sealed as shown on the Drawings or in the Specifications.

2.07.03 Jacking Pipe Method

When specified or indicated on the Drawings, the pipe to be jacked shall also be utilized as the carrier pipe. The pipe shall be jacked into place by approved methods that will provide accurate alignment and grade. Excavation shall be performed ahead of the pipe by working inside the pipe or shall be performed by boring with approved equipment suitable for the intended use.

2.07.04 Measurement & Payment

The length of pipe to be measured for payment shall be the actual length of casing or jacking pipe actually jacked or pushed into place. When additional casing is specified or authorized, but is not actually jacked in place, the cost for furnishing and placing such additional casing will be paid for separately. If a unit price has not been established in the Proposal, payment will be based on the contract provisions for extra work. No additional payment will be made where the Contractor jacks or installs additional casing not shown on the Drawings or authorized by the Engineer.

The contract price per lineal foot for furnishing and jacking the pipe, or casing, where the casing method is used shall be payment in full for completing the work as specified herein including the necessary jacking pits and connections to pipes of other materials.

The carrier pipe shall be paid at the contract price for watermain, storm sewer, sanitary sewer, or force main per unit prices shown on the proposal and shall be payment in full for furnishing and installing the carrier pipe inside the casing.

2.08 SUBGRADE

The subgrade for pipe and/or structures shall be firm, dense, and thoroughly compacted and consolidated, free from mud and muck, and sufficiently stable to remain firm and intact under the feet of the workmen.

2.08.01 Unstable Foundation

When the soil beneath the normal pipe embedment area is soft or unstable, even with adequate dewatering, or in the opinion of the Engineer cannot support the pipe or utility, further depth shall be excavated and refilled to the proposed grade with MDOT Class II granular material (for plastic pipe the material must comply with ASTM D2321) compacted in twelve (12) inch layers as specified in Section 2.09.05, or other approved means shall be employed to assure a firm foundation for the utility. The volume of unstable foundation removed and replaced with approved materials for which payment will be allowed shall be determined in cubic yards unless otherwise specified on the Drawing or in the proposal. Said volume to be computed by assuming that the cross section area of the unstable foundation takes the form of a trapezoid as shown on the Standard Detail for Unstable Soil Removal for Utility.

Payment for removal and replacement of unstable foundation will be paid under the contract provisions for extra work, unless specific Proposal items have been provided, in which case, the unit price bid shall be payment in full for performing the work as specified. If the soil in the bottom of trench is soft due to excessive amounts of ground water, and/or the Contractor's method of operation, stabilization of the trench bottom shall be at the Contractor's expense.

2.08.02 Special Foundations

Where the subgrade at the bottom of the excavation consists of soil which is unstable or yielding to such a degree that, in the opinion of the Engineer, it cannot properly support the pipe or structure, the Contractor shall construct such additional foundation or reinforcement of the subgrade as may be specified, such as timber piling, geotextiles, or other means as approved by the Engineer to provide a proper foundation.

The construction of special foundations will be paid for separately based on the contract provisions for extra work, unless specific Proposal items have been provided, in which case the unit price bid shall be payment in full for performing the work as specified.

2.09 PIPE EMBEDMENT

2.09.01 General

Pipe embedment shall include the furnishing and placing of approved materials as specified or as directed from 4 inches under the outside bottom of the pipe to 12

inches over the outside top of the pipe. Various classes of pipe embedment may be specified or shown on the Drawings or Standard details in which case the limits of the various types will also be specified.

2.09.02 Flexible Pipe Embedment

Flexible pipe is any pipe having a pipe stiffness of less than 60 psi. as defined under the requirements of ASTM Designation D2412 (this includes all plastic pipe except Composite (Truss) pipe, and may include corrugated metal pipe, ductile iron pipe, and steel pipe, depending on pipe diameter and wall thickness).

Pipe embedment for flexible pipe shall be Class B as shown in the attached standard details. For pipes less than fifteen (15) inches in diameter, bedding material meeting the requirements of Section 902.07 of the MDOT 2012 Standard Specifications for Construction for granular materials Class II, modified to 100% passing a 1" sieve shall be used. If stone is used for bedding, it shall meet the requirements of ASTM D2321 (Table 1 – Embedment Classes for Plastic Pipe) for Class 1A crushed stone. An Engineer approved geotextile filter fabric shall be placed around all areas where Class 1A crushed stone pipe embedment is used as shown on the standard details. Transition zones between crushed stone and sand embedment shall be separated by a geotextile fabric. For pipes fifteen (15) inches in diameter and larger, bedding material meeting the requirements of Section 902.07 of the MDOT 2012 Standard Specifications for Construction for granular materials Class II, modified to 100% passing a 1 sieve shall be used.

2.09.03 Class B Pipe Embedment

Unless otherwise specified or shown on the Drawings, all pipe embedment shall be Class B pipe embedment as shown on the Standard details. When the soil in the bottom of the trench at pipe subgrade meets all the requirements for Granular Material Class II as specified in the MDOT 2012 Standard Specifications for Construction, Section 902.07 and in the opinion of the Engineer will provide suitable bedding for the pipe, such soil may be utilized as bedding material and prepared to receive the pipe as specified without undercutting and subsequent replacement.

Plastic pipe embedment shall comply with ASTM D2321.

2.09.04 Special Pipe Embedment

Various types of special pipe embedment may be specified or shown on the Drawings in locations where special conditions require their use. The Contractor shall perform all the work of constructing special pipe embedment where specified.

2.09.05 Placing Pipe Embedment Material

Pipe embedment material shall be placed in the bottom of the trench and shaped by hand to provide a firm and uniform bearing for the barrel of the pipe with additional shaping to accommodate the bells on bell and spigot pipe. After each pipe has been

graded, aligned, and placed in final position on the bedding material and jointing is complete, additional embedment material shall be carefully placed and compacted under and around each side of the pipe and over the pipe until it is completely covered by 12 inches of embedment material. Said material shall be distributed along both sides of the pipe uniformly and simultaneously to prevent lateral displacement of the pipe. All granular embedment material shall be compacted to 95% of maximum unit weight in accordance with MDOT procedures.

All the work of placing pipe embedment shall be considered an integral part of installing the pipe and shall be completed immediately after the pipe is laid to the correct alignment and grade.

2.09.06 Basis of Payment

All the work of furnishing and/or placing pipe embedment material as specified shall be included in the contract items for the proposed work as follows:

2.09.06.01 Class B Pipe Embedment

When a contract item has been provided in the proposal for special backfill, payment will be made under this item as specified in Paragraph 2.10 for approved granular material obtained off the site. When no specific item for special backfill has been provided, this work shall be included in the major work items.

2.09.06.02 Special Pipe Embedment

When one or more contract items have been provided in the Proposal for special pipe embedment, payment to the Contractor will be based on the prices bid for the respective items. When no specific items have been provided in the Proposal, the cost for completing this work as specified shall be included in the major work items except for authorized extra work in which case the contract provisions for extra work shall apply.

2.10 BACKFILLING ABOVE PIPE EMBEDMENT

2.10.01 General

All backfill material shall be free from cinders, ashes, refuse, sod, organic material, boulders, or rocks larger than 3 inches in diameter, frozen material or other material which in the opinion of the Engineer is unsuitable. The soil excavated from the trenches shall be used for backfilling when it is classified as suitable by the Engineer. If all or a portion of the excavated material is classified as unsuitable for backfilling, the Contractor shall remove and dispose of the unsuitable material and shall furnish and place granular material meeting the requirements of Section 902.07 of the MDOT 2012 Standard Specifications for Construction for Granular Material Class II.

All backfilling and compaction shall be performed by the Contractor using methods and equipment approved by the Engineer.

2.10.02 Trenches Requiring Compacted Granular Backfill

Trenches and excavations in the following locations shall be backfilled with approved granular material meeting the requirements of Section 902.07 of the MDOT 2012 Standard Specifications for Construction for Granular Material Class II:

a. Improved areas, including drives, sidewalks, parking areas, around structures, etc.

b. Within the limits of the roadway (within a 1 on 1 slope beginning two (2) feet from the edge of pavement or back of curb towards the right-of-way line).

c. Within the limits of future improvements (shown on Drawings).

d. Within limits specified on Drawings.

e. All sanitary sewer lateral trenches within the limits of the right-of-way.

All backfill within these areas shall be placed in layers not exceeding twelve (12) inches thick, and shall be compacted to 95% of maximum unit weight in accordance with MDOT procedures. Tests for compaction will be made by the Engineer or other representative designated by the Engineer at no cost to the Contractor. When tests indicate a density which is less than that required, the methods or equipment being used shall be modified to obtain the density specified, and the section in question shall be recompacted until the required density is obtained. The cost of retesting shall be borne by the Contractor.

2.10.03 Trenches Not Requiring Compacted Granular Backfill

Where not otherwise specified or directed, backfilling above the pipe embedment shall be made with material which is originally excavated, which is suitable. Backfill materials shall be consolidated by mechanical equipment working longitudinally in the trench, or by other approved methods, so as to be free of large voids with any excess material mounded over the trench or removed as directed by the Engineer. The trench shall be graded to a reasonable uniformity and left in a neat condition.

2.10.04 Basis of Payment

Payment for backfilling including compaction shall be made as follows:

a. When a contract item has been provided in the Proposal for special backfill, payment will be made under this item as specified in Paragraph 2.11 for approved granular material obtained off the site.

b. When no specific item for special backfill has been provided in the Proposal, this work shall be included in the major items of work.

2.11 SPECIAL BACKFILL - MEASUREMENT AND PAYMENT

2.11.01 Measurement

When an item has been provided in the Proposal for special backfill, approved granular material obtained off the site which is required by these specifications or authorized by the Engineer shall be included in this item. Special backfill shall be measured compacted in place. The Contractor shall furnish a delivery ticket for each truck load at the time the material is delivered to the project. The delivery ticket shall be prepared at least in duplicate, one copy of which shall be furnished to the Engineer or his representative, the other copy to be retained in the Contractor's file. No payment shall be made for special backfill unless the individual truck delivery tickets are furnished in this manner. The Engineer will use the delivery tickets when calculating the compacted in place quantity.

2.11.02 Payment

The Proposal unit price per cubic yard for special backfill shall be payment in full for furnishing, placing, and compacting the special backfill and for disposing of the material excavated from the trench as directed and in accordance with the Drawings and Specifications.

Stone used specifically for dewatering procedures shall not be classified as special backfill and no specific payment will be made therefor.

2.12 DISPOSAL OF EXCESS EXCAVATION

All excavated material in excess of that needed for backfill or that material classified as unsuitable by the Engineer shall be disposed of by the Contractor. However, the Engineer reserves the right to direct the Contractor to haul all or a portion of the material not required for backfilling to an area designated by the Engineer which is not more than 1,000 feet outside the project and which is reasonably accessible. This work, when directed, shall be performed at no additional cost to the Owner.

2.13 LIMITATIONS ON OPERATIONS

The Contractor shall at all times conduct his work so that there is a minimum of inconvenience to the residents and businesses in the vicinity of this project. To this end, he shall complete his backfill and remove all debris and unsuitable backfill to a point as close to the actual pipe installation as is practical and keep the area where the pipe construction and backfill has been completed in a neat condition. Open excavations shall be protected by signs, lights, barricades, and/or fence at all times when work is not actually taking place at that excavation. The placement of excavated earth along the line of the trench shall be controlled by the public's use of the street or right-of-way and shall always be confined to approved limits.

Not more than 300 consecutive feet of street shall be closed at one time, and vehicular traffic through any street shall not be stopped for a period longer than two weeks without the written permission of the Engineer. Not more than one cross street shall be closed to vehicular traffic at the same time except by permission of the Engineer. Contractor shall maintain access for emergency vehicles at all times.

2.14 SOIL EROSION AND SEDIMENTATION CONTROL

The Contractor shall conduct his operations in such a manner that all soil is confined within the project limits and prevented from entering storm sewers, water courses, rivers, lakes, reservoirs, or wetlands.

The Contractor shall place a filter or barrier composed of straw, stone or other approved material around all catch basins or other inlets to the storm sewer or drainage courses to prevent sedimentation in these structures. After the construction operations are completed, the Contractor shall remove these filters and clean all the sediment and debris from the catch basins, ditches or other storm sewer structures.

Soil erosion and sedimentation control measures if indicated on the Drawings are considered as minimum requirements and are not to be considered as complete and all-inclusive. Additional control measures as may be required due to circumstances or conditions at the time of construction or as directed by the Engineer, or the designated Soil Erosion Control agency, shall be placed as required to insure conformance with the Part 91 of PA 451 of 1994. Deviations from or additions to the erosion control measures shown on the Drawings shall be subject to the approval of the Engineer or enforcing agency.

The Contractor is responsible to have a certified storm water operator and complete all such reports as required by regulatory agencies as it relates to storm water and soil erosion and sedimentation control.

The cost of this work and other control measures which may be required or directed by the Engineer shall be included in the major work items to the cost of the project unless specific items have been provided in the proposal.

2.15 STREAM CROSSING

The rules and regulations of Act 451, shall govern all streams, wetland and river crossings.

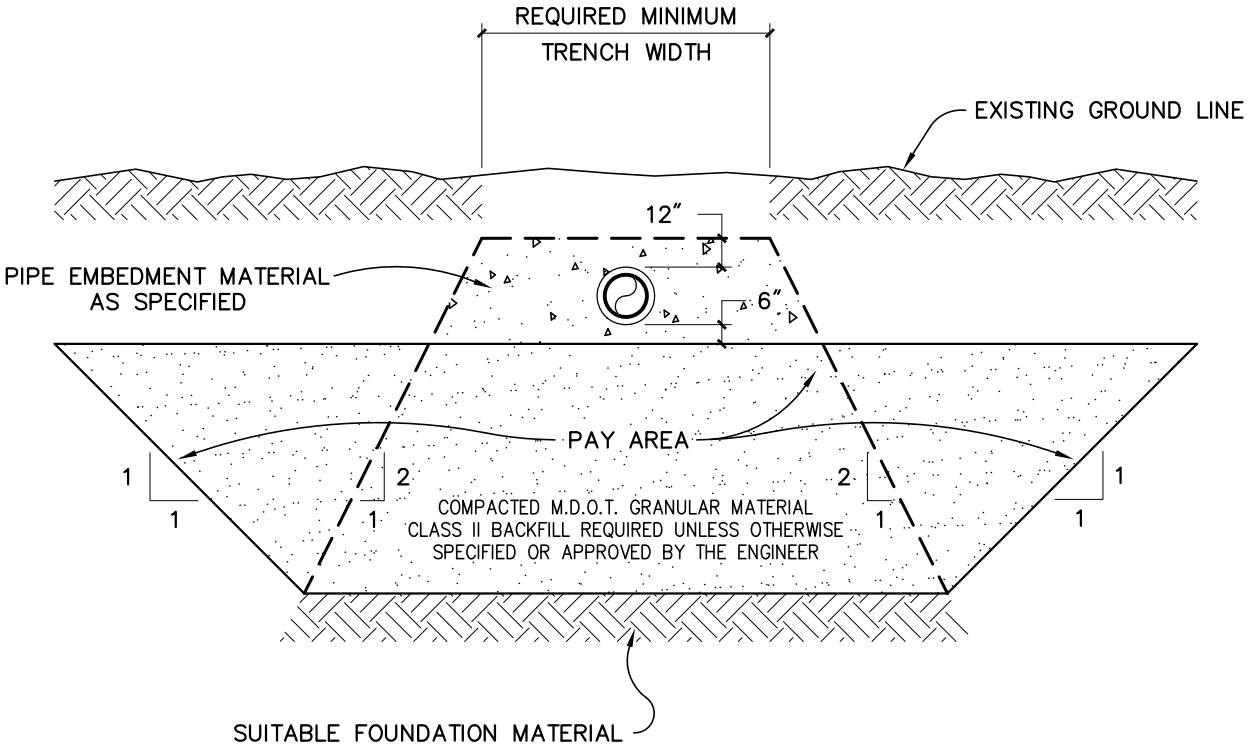

UNSTABLE SOIL REMOVAL FOR UTILITY

H:\SPECIFICATION DRAWINGS\SECTION 2 - EXCAVATING\16_S2_EXCAVATING_SOIL REMOVAL.DWG - WDS - Oct, 26 2012 - 02:51pm - Prein&Newhof

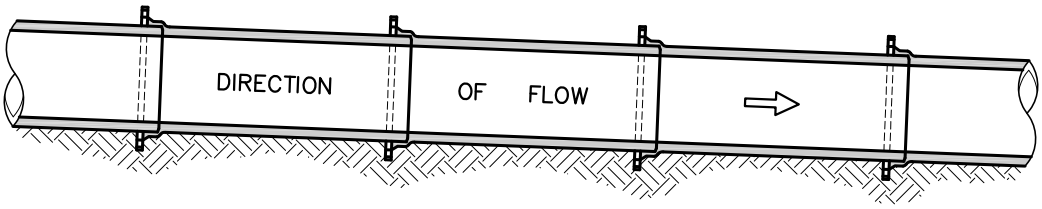

EXCAVATION FOR BELLS

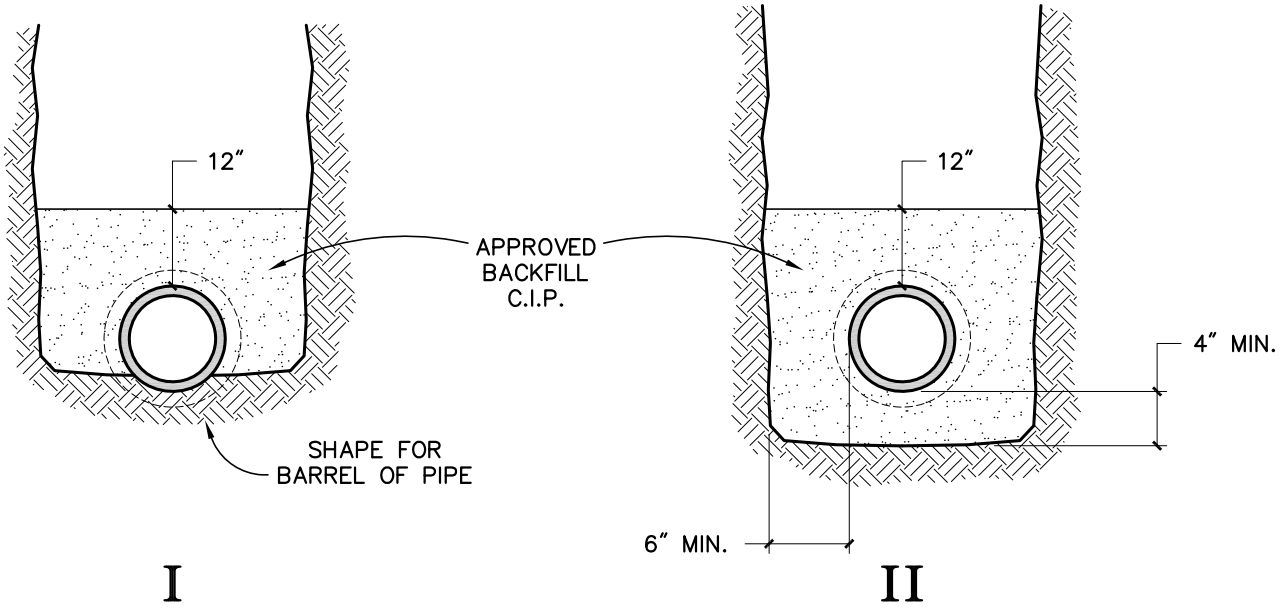

CLASS B PIPE EMBEDMENT

NOTES

1. ALL BACKFILL INDICATED SHALL BE COMPACTED TO 95% OF MAXIMUM DENSITY IN ACCORDANCE WITH M.D.O.T. PROCEDURES.
2. METHOD I SHALL BE USED IN AREAS OF UNCONSOLIDATED SOILS. (e.g. SAND, GRAVEL)
3. METHOD II SHALL BE USED IN AREAS OF CONSOLIDATED SOILS (e.g. CLAY, HARDPAN, ROCK)

H:_SPECIFICATION DRAWINGS\SECTION 2 - EXCAVATING\17_S2_EXCAVATING_CLASS B PIPE EMBEDMENT.DWG - WDS - Oct, 05 2012 - 10:03am - Prein&Newhof

[Intentionally left blank]

SECTION 3

SPECIFICATIONS FOR SURFACE RESTORATION

3.01 DESCRIPTION OF WORK

All areas disturbed by construction operations shall be restored to the original condition thereof as determined by the Engineer using information from drawings, surveys, and photographs or video tapes when available.

The work shall be performed in accordance with the specifications and drawings, the MDOT 2012 Standard Specifications for Construction and the following specifications.

3.02 GRADING

All streets, walks, and other improved surfaces disturbed by construction operations shall be replaced to uniform lines and grades established by the Engineer. The finish grade line will be established within three (3) inches of the existing ground profile shown on the drawings unless a proposed grade is shown which indicates otherwise.

The Contractor shall perform all grading, compacting, shaping, and related work required to prepare the subgrade to the satisfaction of the Engineer. The cost for preparing the subgrade as specified herein shall be incidental to the cost of the project, and no specific payment will be made therefor.

3.03 REPLACEMENT OF AGGREGATE STREETS AND DRIVEWAYS

Aggregate streets shall be constructed in accordance with the typical section shown on the drawings and shall consist of a minimum of six (6) inches of aggregate surface course as specified below.

3.03.01 Materials

Aggregate surface course shall meet the requirements specified in Section 306 of the MDOT 2012 Standard Specifications for Construction. All material shall be taken from stockpiles that have recently been tested by the county road commission, MDOT, or an independent laboratory.

Aggregate material that is removed from roadways and driveways shall not be reused but shall be replaced with an equivalent depth of newly compacted aggregate conforming to MDOT 22A.

3.03.02 Construction Methods

Placement of aggregate surface course shall be in accordance with the applicable portions of Section 306 of the MDOT 2012 Standard Specifications for Construction.

3.03.03 Aggregate Driveways and Field Drives

Aggregate driveways and field drives shall be replaced with a minimum of six (6) inches of MDOT 22A aggregate compacted in place.

3.03.04 Culverts

Culverts that are removed may be reused, if they are in sound condition. If damaged, the culverts shall be replaced with ASTM C76 Class III concrete pipe or equivalent pipe. The cost of removing and replacing the culverts shall be considered part of the major items of work found in the Proposal unless otherwise specified.

3.03.05 Measurement & Payment

Except as specified in Section 3.04, all replacement of aggregate streets and driveways shall be measured in lineal feet along the centerline of the main line utility being constructed and shall include all final grading and shaping required. The width of gravel replacement will not be considered for payment unless specific items to that end have been provided in the Proposal.

3.04 REPLACEMENT OF SURFACE AGGREGATE IN SPECIFIED AREAS

The Contractor shall furnish and place additional aggregate conforming to MDOT Specifications in locations determined by the Engineer for the replacement of aggregate shoulders, drives, and streets where linear measurement (as specified in Section 3.03.05) is impractical, where only part of an existing aggregate surface requires replacement, or where field conditions require replacement of the aggregate to a greater or lesser thickness than six (6) inches as determined by the Engineer.

Aggregate shoulders disturbed by the Contractor's operations shall be restored or replaced to their original width and thickness with aggregate conforming to the requirements of Section 902 of the MDOT 2012 Standard Specifications for Construction for 22A or 23A aggregate as specified.

3.04.01 Measurement & Payment

Surface aggregate shall be measured in tons or cubic yards or as specified in the Proposal. The Contractor shall furnish a truck delivery ticket for each load when it is delivered to the project which clearly states the quantity in tons or cubic yards, date of delivery, and the specific location used on the project. The price per ton or

cubic yard as bid in the Proposal shall be payment in full for furnishing, placing, compacting, and grading the surface aggregate as directed by the Engineer.

Measurement of shoulder restoration shall be in lineal feet along the centerline of the main line utility being constructed directly below the shoulder or in square yards according to the Proposal Item. If there is no Proposal Item for shoulder restoration, it shall be considered incidental to the project, and no separate payment shall be made therefor.

3.05 REPLACEMENT OF HOT MIX ASPHALT (HMA) STREETS

Hot Mix Asphalt (HMA) streets shall be constructed in accordance with the typical section shown on the drawings and, unless otherwise specified, shall meet the requirements of 13A in Section 501 of the MDOT 2012 Standard Specifications for Construction placed at 330 lbs./sq.yd. minimum (165 lbs./sq. yd. leveling, 165 lbs./sq. yd. surface) over six (6) inches of compacted 22A aggregate.

3.05.01 Materials

Aggregate base for HMA streets shall meet the requirements of 22A in Section 902 of the MDOT 2012 Standard Specifications for Construction. HMA for base, leveling, and surface courses shall be as specified, and shall conform to the requirements of Section 501 of the MDOT 2012 Standard Specifications for Construction. Materials for bond coat shall be as specified in Section 501 of the MDOT 2012 Standard Specifications for Construction.

3.05.02 Construction Methods

Aggregate base for HMA streets shall be placed in accordance with Section 302 of the MDOT 2012 Standard Specifications for Construction.

HMA mixtures shall be placed in accordance with the applicable portions of Section 501 of the MDOT 2012 Standard Specifications for Construction. For replacement of valley gutters, pavers shall be equipped with an extension to the vibrating screed adjustable to fit the typical section shown on the drawings.

The Contractor shall not place the aggregate base course until the subgrade has been approved by the Engineer. The Contractor shall not place the first HMA course and each successive HMA course until the underlying aggregate or HMA course has been approved by the Engineer.

3.05.03 Saw Cutting

HMA street, driveway and spillway replacement shall include saw cutting the asphalt pavement at the edge of the trench for the full depth of the pavement. Payment for saw cutting shall be included in the pay items for street replacement and driveway replacement unless otherwise specified.

3.05.04 Measurement & Payment

HMA street replacement shall be measured in lineal feet along the centerline of the main line utility being constructed. The width of the street replaced will not be considered for payment, and payment will not be made for any length of street replaced beyond that which is directly above the pipe installed. HMA street replacement may also be measured in square yards or tons as specified in the Proposal.

Aggregate base for HMA shall be considered part of the HMA items, and no separate payment will be made therefor unless a specific Pay Item for aggregate base is listed in the Proposal.

The cost of HMA bond coat shall be considered part of the bituminous paving.

3.06 REPLACEMENT OF AGGREGATE SURFACE OR HOT MIX ASPHALT (HMA) PAVED AREAS (PATCHING)

When the drawings and specifications do not require that the Contractor replace an entire street, the surface that is disturbed shall be replaced as specified herein.

3.06.01 Materials

Surfacing aggregate and aggregate base for HMA pavement shall conform to the requirements for 22A aggregate in Section 902 of the MDOT 2012 Standard Specifications for Construction.

Unless otherwise specified on the drawings or in the specifications, HMA 13A, conforming to the requirements in Section 501 of the MDOT 2012 Standard Specifications for Construction, shall be used for HMA patches. When existing seal coat pavement is disturbed, a HMA patch shall be placed.

3.06.02 Construction Methods

When an aggregate surface is disturbed by the Contractor's operations, the edges of the existing aggregate surface shall be trimmed and shall be free of all foreign material before the new aggregate is placed. The subgrade shall be graded and compacted to the proper lines and grades to match the adjacent surface. The aggregate shall be placed in layers not to exceed six (6) inches and shall be compacted to 98% of its maximum unit weight in accordance with MDOT procedures.

When a HMA surface is disturbed by the Contractor's operations, that surface shall be replaced at a thickness equal to the thickness of the existing pavement adjacent to the trench but not less than one and one-half (1-1/2) inches thick. If existing pavement is greater than two (2) inches in thickness, the replacement pavement shall be placed in two or more layers. Aggregate base shall be replaced at a thickness equal to the adjacent aggregate base (minimum six inches) as specified

for aggregate patches above. After placement of the aggregate base but prior to its final shaping and compaction, the edges of the existing pavement shall be trimmed to straight lines a minimum of one (1) foot from the edge of the trench to permit a straight and uniform surface between the existing and new aggregate base. Trimming of the existing pavement shall be by sawcutting or other suitable means approved by the Engineer.

All bituminous valley gutter located in disturbed HMA surface areas shall be replaced by the Contractor. Replacement of valley gutter in disturbed HMA areas shall be considered part of the HMA replacement.

3.06.03 Measurement & Payment

Replacement of aggregate surface shall be measured in lineal feet along the centerline of the main utility line being constructed. HMA paved areas (patching) shall be measured in square feet or square yards of actual aggregate surface and HMA patching replaced. Payment shall be made according to the Proposal Item for the type of surface to be replaced and shall include all trimming, removal, shaping, compacting, aggregate base, and HMA or aggregate surface.

3.07 REPLACEMENT OF CONCRETE IMPROVEMENTS

The Contractor shall replace all concrete sidewalk, drives, curb and gutter, and pavement removed during the installation of the utility or broken by the Contractor.

3.07.01 Materials

Concrete shall meet the requirements for Grade S2 Concrete as specified in Section 701 of the MDOT 2012 Standard Specifications for Construction. Other materials shall meet the requirements of the applicable portions of the MDOT 2012 Standard Specifications for Construction.

3.07.02 Construction Methods

The thickness of the concrete shall be the same as the concrete adjacent to the trench but shall not be less than four (4) inches. The alignment and grade and the contour and finish of the surface shall be the same as the concrete adjacent to the trench unless otherwise directed by the Engineer.

Pavements, walks, and drives shall be sawcut at the edges of the trench or removed to existing joints. The depth of the saw cut shall not be less than the full depth of the concrete.

The forms and joints and the methods of placing, curing, and protection shall be consistent with standard practice and shall meet all the requirements of the MDOT 2012 Standard Specifications for Construction for the various items.

3.07.03 Concrete Curb & Gutter (Header Curb, 18 inch, 24 inch, and 30 inch)

Concrete curb and gutter shall match the existing curb and contain two No. 4 steel reinforcing bars. Concrete grade shall be S2. Payment shall be made in lineal feet of curb and gutter replaced. All joints shall be saw cut. Curb and gutter shall be placed in accordance with Section 802 of the MDOT 2012 Standard Specifications for Construction.

3.07.04 Sidewalk and Concrete Driveways

Sidewalk and concrete driveways shall be placed in accordance with Section 801 & 803 of the MDOT 2012 Standard Specifications for Construction. Concrete shall be air entrained. All 6-inch thick concrete sidewalks shall include 6x6-W2.9xW2.9 woven wire steel mesh.

3.07.05 Measurement & Payment

Concrete walks, pavement, and drives will be measured in square feet or square yards of actual concrete surface replaced. Concrete curb and gutter shall be considered part of the construction of the utility line unless a specific item is provided in the Proposal for its replacement. If so specified, the concrete curb and gutter or valley gutter replacement shall be paid for in lineal feet measured along the face of a header curb or along the flow line of gutter when constructed as part of the curb. Concrete that has been broken by the Contractor outside the limits of the trench will not be considered for payment unless otherwise specified.

3.08 REPLACEMENT OF LAWN IMPROVEMENTS

3.08.01 Underground Sprinkling Equipment

Underground sprinkling lines, valves & heads, and water system curb stops and boxes are specifically excluded from the pay items. The Contractor shall take the necessary precautions to preserve this equipment during construction. Any underground sprinkling equipment disturbed by the Contractor shall be replaced at the Contractor's expense.

All underground sprinkling equipment shall be replaced in a timely fashion so as to minimize damage to the lawn areas. The Contractor will be responsible for any lawn damage caused by delayed replacement of the sprinkling equipment.

3.08.02 Fences

Fences, which are removed for construction, shall be replaced with equal or better type and size. The cost of removing and replacing the fences shall be considered part of the major items of work found in the Proposal unless otherwise specified.

3.08.03 Ornamental Shrubbery and Bushes

Ornamental shrubbery and bushes that are removed during construction shall be replaced in kind and size in a vigorous growing condition. Replacement costs shall be considered part of the major items of work found in the Proposal unless otherwise specified. All shrubs and bushes replaced shall be insured by a one-(1) year warranty commencing from the date of installation.

3.09 TURF RESTORATION

All areas of established turf shall be replaced as nearly as possible to their original condition.

3.09.01 Topsoil

Topsoil shall be placed at a minimum depth of four (4) inches over all areas disturbed by the Contractor's operations. The subgrade shall be graded to conform to the adjacent contours and shall be approved by the Engineer before placing topsoil. The topsoil shall then be placed in accordance with Section 816 of the MDOT 2012 Standard Specifications for Construction.

The soil shall be dark, organic natural surface soil, exclusive of muck or peat, suitable for the establishment of grass or other vegetable growth.

3.09.02 Fertilizer

After the topsoil has been placed, it shall be fertilized with a starter fertilizer at the rate of two (2) pounds per 1,000 square feet, in proportions of 16% nitrogen, 32% phosphoric acid, and 3% potash, or as directed by the Engineer. Fertilizer shall be applied just before the placing of the seed to retain its full benefit before unfavorable weather can cause deterioration.

3.09.03 Seeding

All previously seeded lawn areas shall be reseeded with Class A seed. Other areas disturbed by the Contractor's operations shall be seeded with Roadside seed. Temporary seed shall be placed for erosion control or temporary soil stabilization of stockpile areas. Seed mixtures, application rates, and methods shall be in accordance with Section 816 of the MDOT 2012 Standard Specifications for Construction.

Seasonal limitations on seeding in Section 816 of the MDOT 2012 Standard Specifications for Construction are waived. The Contractor shall repeat the seeding procedure as often as necessary to produce a close stand of weed-free grass.

3.09.04 Mulching

All seeded areas shall be mulched immediately following the seeding. Mulching shall be applied to all newly seeded areas at a rate of two (2) tons per acre in accordance with the requirements of Section 816 of the MDOT 2012 Standard Specifications for Construction, or as directed by the Engineer. Separate loose straw mulch is prohibited on residential lawn areas.

3.09.05 Hydro Application

All fertilizing, seeding and mulching shall be applied by an approved Hydro seeding and mulching process unless separate applications as heretofore described are approved by the Engineer.

3.09.06 Erosion Control

All erosion control measures shall be installed and maintained in accordance with the Soil Erosion and Sedimentation Control plan and permit. Unless otherwise specified, mulch blanket and high velocity blanket shall be placed in accordance with Section 816 of the MDOT 2012 Standard Specifications for Construction.

3.09.07 Sod

Sod shall be placed only where directed by the Engineer or as noted on the drawings or specifications.

All sod shall be nursery grown, conforming to MDOT requirements for Class A. Sod shall be approved by the Engineer before placing and shall be placed in accordance with the requirements of Section 816 of the MDOT 2012 Standard Specifications for Construction. The base on which the sod is to be laid shall consist of a minimum of four (4) inches of topsoil placed, watered and fertilized in the same manner required for seeding.

3.09.08 Measurement & Payment

Turf restoration will be measured in lineal feet along the centerline of the main utility line being constructed. Payment will be made according to the appropriate item for seeding or sod. Topsoil, fertilizer, mulch and erosion control shall be incidental to these items unless specific proposal items are provided. Any area disturbed by the Contractor's operations outside of the limits of the trench shall be restored by the Contractor to its original condition but will not be considered for payment.

3.10 SCHEDULING OF RESTORATION WORK

Initial restoration (rough grading, temporary aggregate if necessary, removal of excess excavated material and debris) shall be done each day to the extent necessary to allow the movement of local traffic and permit access to all properties

for emergency vehicles. Maintenance of streets, drives, sidewalks, etc. shall be the responsibility of the Contractor (including dust control, grading, stabilization, etc.) until the restoration is complete and has been accepted by the Engineer.

Restoration of each street or section of utility line shall follow the construction in a timely fashion so as to minimize inconvenience to the adjacent property owners and the general public. The manner in which this restoration is done by the Contractor will be a determining factor in the approval by the Engineer of staking requests and partial payment requests.

3.11 LIMITS FOR MEASUREMENT & PAYMENT FOR SURFACE RESTORATION

All work necessary to return the area of construction operations to its original condition, other than the items listed in the Proposal, shall be considered incidental to the construction, and no specific payment will be made therefor.

For surface restoration items measured in lineal feet, payment will be based upon the type of surface that is directly above the utility. Only one surface restoration item shall be paid for each lineal foot of utility. Additional restoration on either side of the utility to the limits of construction will be done by the Contractor at no additional cost to the Owner. For example, when the utility is directly under the bituminous street, only the item of bituminous street restoration will be paid. Topsoil, seed, fertilizer and mulch required to restore the area adjacent to the street will not be paid for separately.

Payment will be made for the proposal items only. All of the work specified above and indicated on the drawings will be considered included in the unit prices.

[Intentionally left blank.]

CITY OF MUSKEGON SPECIFICATIONS FOR WATER MAINS

13.01 WATER MAIN

13.01.01 General

As used herein, water mains shall be considered to mean all pipes, conduits, and all necessary appurtenances to transport water, lying within public rights-of way or easements. All materials outlined in this Division shall be manufactured in the United States or be otherwise approved by the City Engineer.

13.01.02 Scope

The Contractor shall, unless otherwise noted, furnish all materials, equipment, tools and labor necessary to accomplish the work required under this contract in a safe and reliable manner, and all contract items are to be placed in proper operating conditions in full conformity with the contract and proposal, detail drawings, specifications, engineering data, instructions, and recommendations of the equipment manufacturer and materials as approved by the engineer.

13.01.03 Location

The location, grade and the approximate depth of the proposed water main is shown on the plans with line and grade to be provided by the City of Muskegon unless otherwise noted. The Engineer reserves the right to make minor changes in alignment, grade and location of appurtenances, when such changes deemed necessary or advantageous. Major changes will be accomplished as described in Part 3, Section 1 Item 39 page 45 of the City of Muskegon Standard Contract.

13.01.04 Clean-Up

Surplus materials and appurtenances furnished by the City shall be delivered by the Contractor to the Public Service Building. Confirmation and/or receipts should be obtained from the Stockroom Manager and reported to the Project Inspector. All other surplus construction material shall be removed from the site by the Contractor. Trench backfill and surface replacement shall follow pipe laying operations so that the extent of open trench shall not exceed 500 feet, unless specific authorization is obtained from the Engineer. The finished site shall be free of debris and neat appearance.

13.01.05 Contractors “Notice to Proceed”

After receiving the “Notice to Proceed” the contractor shall give the City Engineer a minimum of 48 hours notice of start to allow for survey layout and assignment of inspection personnel. Whenever work is to be done by City forces or coordination with City forces, the contractor shall provide a

minimum of 48 hours advance notice to the department from which the work is requested.

13.02 MATERIALS

13.02.01 General

All materials furnished by the Contractor must conform in all respects to the following standards. (Where reference specifications are used, they shall be considered as referring to the latest revised issue).

The Contractor shall be responsible for all material furnished and shall replace, at his own expense, all such material found defective during the life of the contract. For material furnished by the City of Muskegon, the Contractor shall become responsible from the time of delivery, and shall reject any defective materials within three calendar days of delivery, and such materials shall be replaced by the City. Any defective material furnished by the City and installed by the Contractor without discovery of such defect will, if found defective prior to final acceptance, be replaced with sound material by the owner. The Contractor, however, shall at his own expense, furnish all labor, equipment and supplies necessary to facilitate the above replacement.

The Contractor shall furnish to the Engineer a manufacturer's certification that all materials meet minimum requirements as detailed in the material specifications references (refer to paragraph 13.02.02). The Contractor's unit prices will be assumed to include an allowance for this responsibility.

All pipe and related items shall be stored as recommended by the manufacturer, on suitable timber skids free from contact with the ground. Gaskets shall be stored in as cool, clean and shaded a place as practicable.

Unloading shall be made so as to avoid damage to the castings or pipe. Under no circumstances shall materials be dropped. All special handling equipment and temporary supports shall be furnished by the Contractor.

No damaged or broken pipe shall be used, no damaged or broken cement lining in pipe or fittings shall be used, In the event coatings are damaged, the damaged area shall be recoated with an approved coating, at the Contractors expense, in a manner approved by the Engineer.

The water main pipe shall be handled by means of slings. No hooks or loader forks shall be permitted to come in contact with joint rings or be inserted in the ends of the pipe and fittings for any reason.

Any material found defective or flawed during the progress of work will be rejected and removed from the site. No attempt will be made to repair defective materials without written consent of the Engineer.

13.02.02 Water main Specification Reference

(a) Ductile Iron, Push-On Joint Pipe, 3"– 24" ANSI/AWWA C151/A21.51
(b) Push-On Joint Detail, ANSI / AWWA C111 / A21.11

(c) Ductile Iron, Mechanical Joint Pipe, 3"– 24" ANSI/AWWA C151/A21.51

(d) Mechanical Joint Detail, ANSI / AWWA C111 / A21.11

(e) Cement Lining, ANSI / AWWA C104 / A21.4 (Standard Thickness)

(f) Ductile Iron Pipe Wall Thickness Determination, ANSI/AWWA C150/ A21.50

(g) Ductile Iron, Flanged Joint Pipe, 3"– 24" ANSI/AWWA C151/A21.51 and ANSI/AWWA C110

(h) Mechanical Joint Fittings, ANSI / AWWA C153 / A21.53 and ANSI/ AWWA C111/A21.11

(i) Push-On Joint Fittings, ANSI / AWWA C110 / A21.10 and ANSI/ AWWA C111/A21.11

(j) Flanged Fittings, ANSI/AWWA C110/A21.10

(k) Flanges, ASA-B16.1 Standard Class 125

(l) Copper Pipe, ASTM Spec B88-55 "Type K"

(m) Retainer Glands EBAA MEGALUG 1100 Series or Equal

(n) Fire Hydrants, ANSI/AWWA C502

13.02.03 Provisions for Electrical Thawing

(a) Serrated Silicon Bronze Wedges

Two per joint for 3" through 12" pipe, four for larger pipe. Each wedge is to be driven into the opening between the plain end and the bell until snug. When four wedges are used, they are inserted side by side, in pairs. Wedges can be used with push-on joints only.

(b) Copper Cable Bond Conductor

Installation of copper cable bond conductor across the joints of push-on and mechanical joint pipe and fittings. The copper cable shall be a

minimum AGW size #4 copper cable, The copper cable shall be welded to the pipe on push-on joints and have cable ends that fit standard water main bolts for mechanical joints. The copper cable shall be of sufficient flexibility to withstand ground and pipe movement after installation.

(c) Copper Strap Bond Conductor

Installation of copper strap bond conductor across the joints of push-on joint pipe. The copper jumper strips shall be 1/16" x 3.4", 48 ounce soft copper, bolts shall be 5/16" x ¾" silicon bronze hex head bolt and nut. The copper strap shall be welded to the pipe and be of sufficient flexibility to withstand ground and pipe movement after installation.

(d) Conductive Push-On Gaskets

These gaskets may be used in lieu of wedges, cable or strap bond conductors. Metal contact strips which are molded or inserted into the gasket must insure positive electrical contact between pipes. A thorough cleaning of gasket seating surface should be preformed prior to assembly.

(e) Payment

The payment for provisions for electrical thawing shall be included in the cost of the new water main. No other payment shall be made.

13.02.04 Fire Hydrant

A 5 ¼" M.V.O. East Jordan (5BR 250) hydrant shall be furnished and installed in the locations shown on the drawings and should be placed in a plumbed vertical position. Hydrants shall be of the non-compression type, and shall conform to ANSI / AWWA C502 as last adopted, and any Underwriter Laboratories requirements. Hydrants shall have two 2-1/2" hose connections and one 5" "STORZ" fitting; their barrels shall be 8-1/2 inches in diameter (minimum) with 5-14" valve openings and shall open to the left utilizing a 1" nut (measured flat to flat). All hydrants shall be painted red. Threaded connections shall conform to the City of Muskegon Standard Big Six (six threads per inch). Hydrant inlets shall have 6" diameter mechanical joint connections unless otherwise specified on the plans or in the special provisions. The hydrant assembly shall have all mechanical joints restrained with ductile iron MEGALUG glands. The hydrant shall be so designed so that the direction of the nozzles can be reoriented without digging up the assembly, and so that height extensions may be added at a later date. Hydrants shall have bronze interior parts including operating stems. Bronze to bronze main valve seats shall be required if seat removal is necessary for removing the valve assembly. All hydrants shall have a minimum bury of 6-1/2 feet. If the operating screw is located on the top it shall be bronze. When hydrants are placed in sand a ¾" street "L" shall be placed in the drain holes and ½" cu. yd.

"P" stone placed around the drains, in clay areas the drain holes will be plugged and a "P" painted on hydrant.

13.02.05 Gate Valves

All valves shall be iron body, bronze mounted, double disc. Parallel seat or compression resilient seated, with a 2" operating nut open to the right, with the direction indicated by an arrow cast on to the valve or the operating nut. Generally, end connectors shall be mechanical joint for all exterior ground-buried valves, unless otherwise specified. All valves shall have bronze stem, o-ring stem seal, non-rising stem, the stem shall have continuity with the body, and shall have a clean waterway equivalent in area, when open, equal to that of the connecting pipe. All valves shall be of new construction and complete with operating equipment and other appurtenances necessary for operation. All valves shall be designed to maintain a minimum 150 pound working pressure, tested at 300 pounds for sizes 14" through 48" or minimum 200 pound working pressure and tested at 400 pounds for sizes 2" through 12" and manufactured as per ANSI / AWWA C500 and C515. The valves shall be shipped as fully assembled as practicable. The exposed flanges and mounting pads shall be protected by wooden pieces bolted to them. All necessary skids and lifting devices shall be provided. Non-attached items shall be packed in boxes and properly labeled for assembly. The contractor may be required to furnish the services of a competent factory-trained serviceman to check final installation and supervise original start-up and operation of the equipment specified. Such services shall be included in the cost of the valve.

13.02.06 Butterfly Valves

Butterfly valves shall be manufactured to conform in all respects to the latest revisions of ANSI / AWWA C504, and coated inside and outside with standard bitumastic coating for water mains. The body, disc, shaft, seats, bearings and operators shall be designed based on Class 150B and may be the short or long body type. All butterfly valves shall have a working pressure of 150 psi, hydrostatically tested at 300 psi, and bubble-tight tested at 150 psi. The seat-ring shall be made of rubber body or disc mounted, and shall be adjustable and field replaceable in sizes 16" and larger. The shaft may be of the through type or stub type and shall be marked on the end to indicate the position of the valve disc with respect to the shaft and the shaft shall have continuity with the body. The shaft seals shall be of the "split-V" or "Chevron" type. The valve disc shall be of corrosion-resistant alloy cast iron. The valve disc shall be offset so as to prevent valve flutter in the full open position. The valves shall be equipped with a stainless steel stop in the operator to prevent the disk from rotating through the closed position. The valve operator shall be permanently lubricated and sealed for buried service and shall be equipped with a two-inch square operating nut. The operator shall be constructed such that the valve will open when the nut is turned to the right or in a clockwise direction, with the direction indicated by an arrow cast onto the operating nut. Operators for valves 16" and 20" in size may be of the

traveling-nut or worn gear type. Operators for 24" and larger shall be of the worn gear type. Generally, end connectors shall be mechanical joint, unless otherwise specified. All valves shall be of new construction and be complete with all operating equipment and other appurtenances necessary for operation. The contractor may be required to furnish the services of a competent factory-trained serviceman to check final installation and supervise original start-up and operation of the equipment specified. Such services shall be included in the cost of the valve.

13.02.07 Tapping Sleeve and Valve

Tapping Sleeves shall be full stainless steel sleeve as manufactured by Romac Style SST or approved equal, meeting the requirements of ANSI B16.1 Class 125 and in accordance with MSS-SP60, the sleeve will be required when tapping into existing water mains. The valve shall conform to City of Muskegon Standard Specifications 13.02.05. The joint between the sleeve and valve will be flanged. The Contractor shall present for approval detailed shop drawings of the assembly. Payment shall be at the unit price as described in the proposal and shall represent payment in full for the sleeve, valve and box completely installed.

13.02.08 Valve Boxes

Valve boxes shall be of ductile cast iron, adjustable, and furnished complete including cover, top section, center section and base. Valve boxes shall be not less than five inches in diameter with a minimum adjustment of 24 inches above and below proposed grade. The covers shall have the appropriate name cast on it ("WATER"). All parts of valve boxes, base and covers shall be coated by dipping in hot bituminous varnish. The valve box shall be placed centered on the valve nut and be placed in a plum vertical position. Payment for the materials and labor to install this item shall be included in the cost of the valve, unless otherwise specified.

13.02.09 Adjusting Water Valve Boxes

The water box materials shall be placed centered on the valve nut and be placed in a plumb vertical position. Pavement placement shall be the same as for adjusting manholes, (Section 14.04) unless otherwise specified. No payment will be allowed for adjusting water valve boxes either existing or new unless stipulated in the proposal.

13.02.10 Fitting Restraints

All plugs, caps, tees and bends which deflect 11-1/4 degrees or more, shall be provided with suitable restraints to prevent movement, in a manner acceptable to the Engineer. The restraint shall be applied to joints in each direction from the fitting according to the pipe restraint schedule or as shown on the construction plans in order to resist the thrust of the test pressure.

Details of all restraints, unless specified, are to be submitted to the Engineer for approval. All joint restraints shall be considered incidental to this section of work, and included in the cost of the fitting. When specified as being necessary MEGALUG retainer glands shall be used for all ductile iron mechanical joint pipe and fittings through 24" and fast-grip gaskets for push-on pipe. For sizes larger than those maximums, self-restraining joints such as Superlock, or Lockfast pipe shall be used, or as specified by the Engineer.

13.02.11 Retainer Glands

Retainer Glands shall conform to 2.04.05 specification for water main joints. Payment for this item shall be included with the new pipe and fittings. No additional payment will be allowed.

13.02.12 Flanged Joints

Where specified. Flanged joints shall be drilled using the Standard 125 pound Template.

13.02.13 Plugs and Caps

The caps (Tyler 5-155, or approved equal) plugs (Tyler 5-152, or approved equal) shall be ductile cast iron, and be 2" tapped with plug. Payment for caps and plugs in place shall be bid price as found in the proposal, or otherwise specified. No payment will be made for temporary caps and plugs used for testing purposes.

13.03 CONSTRUCTION METHODS

13.03.01 General Excavation

On any contract where the Engineer will supply grades, the Contractor will notify the Engineer at least 48 hours in advance. The trench shall be excavated true to line and grade and shall be of sufficient width to provide adequate working space for making joints, compacting back fill, sheeting, pumping and of sufficient depth so that the top of pipe will have a minimum cover of 5-1/2 feet as measured from the established or proposed gutter grade, or as measured from the proposed or existing ground elevation (six feet from the top of curb).

The Contractor shall take adequate precautions to protect all grade stakes. The Contractor shall be responsible for the cost of replacement of stakes which are damaged or lost through his negligence.

There shall be a minimum of six inches of clearance on each side of the barrel of the pipe and a maximum width of the trench at the level of the top of the pipe of not more than a distance equal to the O.D. of the pipe plus 24 inches. On paved streets, the pavement shall be cut by means of concrete

saws to a neat and straight line along the top edge of the intended trench opening, and all sawing shall be included in the cost of trench repair.

All material in excess of that needed or which is unusable shall be disposed of at such locations as the Engineer may direct. If the disposal site has been specified in the special provisions, the cost of disposal shall be included in the lineal foot cost of the pipe. If no disposal site has been specified, all excess material becomes the property of the Contractor.

The Contractor shall call Miss Dig 3 working days (Excluding Sat. Sun. and Holidays) before digging (1-800-482-7171) for the location of existing under ground systems. The Contractor is liable for all damages to existing underground systems.

13.03.02 Sheeting and Bracing

When the depth of the trench or soil conditions require, or to prevent damage to adjacent structures and property, or to protect workmen, the sides of the trench shall be sheeted, shored and braced adequately to prevent sliding or caving. All underground utilities crossing the trench or running parallel to the proposed pipe, shall be supported and braced in an approved manner. All materials and labor for sheeting, shoring and/or bracing shall be furnished by the Contractor and will be considered incidental to the work. The Contractor is fully responsible for the sufficiency of such supports and for the integrity of his work. In the removing of the sheeting or bracing, special care shall be taken to prevent any caving of the sides of the excavation and to prevent damage to the completed work or to adjacent property, and to prevent loss of density in the pipe bedding material.

13.03.03 Obstructions

Wherever obstructions, not shown on the plans, are encountered and interfere to such an extent that an alteration to the plan is required, the Engineer shall be notified at once and shall make such changes in the plans as he deems necessary. If such a change results in a significant increase in the amount of work required of the Contractor, such a change shall be paid by change order to the contract, only to the extent that his change in work is not covered by contract unit prices.

13.03.04 Deflections

Deflections for obstructions or other purposes shall be governed by these allowable limits in the table presented below, unless further deflection is allowed by written communication from the Engineer.

DEFLECTION TABLE

Unrestrained Connections only

Pipe Size	Deflection in inches Per 20 foot length
3	27”
4	27”
6	22”
8	17”
10	17”
12	17”
14	11”
16	11”
18	9”
20	9”
24	7”

13.03.05 Laying Condition

Laying Conditions Unless Specified Otherwise, Shall conform to the most Current Michigan Department of Transportation Standard Specifications for Construction or subsequent revision thereof for the trench detail specified.

13.03.06 Unsuitable Conditions

Where unstable soil is encountered at pipe grade, Trench undercut and backfill will be done and Unless Specified Otherwise, Shall conform to the most Current Michigan Department of Transportation Standard Specifications or subsequent revision thereof.

13.03.07 Pipe Care

Care shall be taken to keep the interior of the pipe clean and free from dirt and other foreign materials. Bulkheads shall be used at open ends of the pipe to insure cleanliness, especially at the end of each day’s work. If there is water in the trench, a water-tight plug will be utilized, and the seal must remain in place until the trench is pumped completely dry. The end shall also be plugged whenever the pipe is left unattended. The pipe shall be laid with the bell ends facing in the direction of laying, unless otherwise directed by the Engineer.

13.03.08 Dewatering

When dewatering is encountered, Unless Specified Otherwise, Shall conform to the most Current Michigan Department of Transportation Standard Specifications or subsequent revision thereof.

13.03.09 Push-On Joint Assembly

It is essential that the gasket groove be clean and free of foreign matter prior to lubrication and gasket installation. Wire brushing, wiping or flushing may be required. The cleaned gasket groove shall be lubricated to make gasket installation easier and to assist in proper positioning of the gasket. The gasket must be correctly positioned within the groove. Check with fingers to be sure of correct placement. Lubricate the gasket over its entire inner surface; as well as to the bevel of the plain end. The joint should be assembled with both pipes reasonably straight alignment. Any deflection should be made after the joint is assembled. On any field cut pipe, the outside edge must be beveled and smoothed as any sharp corner may cause gasket damage. Straight alignment is especially important when assembling field cut pipe. Field inspection by the Engineer must be accomplished before a field cut pipe may be joined. During cold weather installations, keep gaskets warm prior to placement within the bell, to reduce their stiffness.

13.03.10 Mechanical Joint Assembly

The inside of the bell and the plain end of the pipe must be thoroughly cleaned of foreign matter and wire brushed if necessary. All surfaces and gaskets should be brushed over with soapy water. A rubbed gasket and follower gland should be placed on the plain end "seated" in the mechanical flanged bell; and then the gasket firmly and evenly pressed into the bell. After the gland is in position for bolting, insert all bolts and make all nuts finger-tight. Keeping the plain end centrally located within the bell, begin tightening bolts, bringing all bolts up evenly at all points around the bell flange. Alternate bolts from side to side until all bolts are uniformly tight within the correct range of torque of 75 to 90 foot pounds (4" thru 24" sizes). If effective sealing is not attained at the maximum torque level, the joint should be disassembled and reassembled after thorough cleaning. Megalug style retainer glands shall be used on all mechanical joints, after all gland bolts are tight, bring all retainer bolts hp evenly around the pipe, tighten all retainer bolts by alternating tightening on opposite sides of the pipe until the twist-off nuts snap off.

13.03.11 Existing Water Main Connections

Existing water main connections may be oversized. The Contractor shall confirm the size of the existing water main prior to the connections. No additional payment shall be made if over sized fittings are required.

13.03.12 Cut and Cap __ Inch Water main

The existing __ inch water main as shown on the construction plans, shall be cut and capped with a ductile iron, mechanical joint cap and restrained with retaining glands. The existing water main will be thrust

blocked in a manner to prevent movement of the existing water main. Engineer will determine if the contractor's method of thrust blocking is acceptable

The completed work, Cut and Cap, __ inch Water main as shown on the construction plans and in the proposal, shall including all materials, labor and equipment, as measured and will be paid for at the contract unit price for Cut and Cap, __ inch Water main. No other payment will be allowed.

13.03.13 Compaction Tests

All soil compaction tests shall be preformed by the City with full cooperation and labor and equipment assistance from the contractor. The Contractor shall be allowed one re-test. All costs for any additional testing due to failure of the Contractor to meet density requirements shall be borne by the Contractor. These costs shall include all labor and equipment and supervision needed to re-test failed areas.

13.03.14 Field Cutting Pipe

The spigot ends of pipe which have been field cut, shall be ground to a smooth surface and painted with two coats of asphaltum metal protective paint.

13.04 WATER SERVICES

13.04.01 Definition

As used herein, water services shall be considered to include all pipe, corporation cocks, curb stops, curb boxes and all necessary appurtenances to transport water from the water main to private property. For larger services requiring valves instead of corporation cocks, specifications will be covered in the Special Provisions.

13.04.02 Scope

The Contractor shall, unless otherwise noted, furnish all materials, equipment, tools and labor necessary to accomplish the installation of all water services at the locations shown on the plans or as located by the Engineer. The Contractor shall conduct his work as to minimize traffic interruptions.

13.04.03 Corporation Cocks

The unit price of this item shall include all labor and materials for tapping the existing water main and installing the corporation cocks, utilizing a Mueller # P25008, Ford # FB1000-X pack joint or approved equal. On services 1 ¼" to 2" a ductile cast iron saddle Ford # FS101 or approved equal

shall be used and will be included with the corporation cock payment. Payment will be for installation complete.

13.04.04 Water Service Line

The unit price of this item shall include all labor and materials for laying copper service pipe, type K, at the location specified and of the size indicated on the plans; in the proposal, or as specified by the Engineer. The service shall be connected to the corporation cock and "goose-necked" for expansion purposes, with a minimum of 5 ½ feet of bury below the proposed grade. Payment for water service shall be by the lineal foot as measured horizontally from the centerline of the main to the centerline of the curb stop or meter pit and from the centerline of the curb stop to the connection point of the existing water service, from the connection point of the meter pit to the connection point of the existing water service shall be lineal foot of pipe used, the connection fitting shall be included in the new water service line and shall have continuity between the old and new service.

13.04.05 Curb Stop and Box

The unit price of this item shall include all labor and materials to install a working and useable curb stop and box., utilizing a Mueller # P25155, Ford # B44-444M pack joint or approved equal with 2 inch Minneapolis thread, bushed for 1 ½ inches. Connections shall be copper pipe to copper pipe. Payment will be for installation complete.

13.04.06 Meter Pit

The unit price of this item shall include all labor and materials to install a working and useable meter pit, utilizing a Ford # W3-T Cover with Locking lid, Ford # AV94-324W pack joint Angle Yoke Key Valve, Ford # L94-24D pack joint Yoke Ell, Ford # EC-23 Expansion Connection, Ford # Y503 Series Yoke Bar, Sono-Loc 20 inch diameter 36 inch high Meter Box, or approved equal on all items, the City of Muskegon will provide the meter. The Contractor will install to finish grade at locations specified on the plans; in the proposal, or as specified by the Engineer. Payment will be for installation complete.

13.05 HYDROSTATIC TESTS

Connecting to Existing Water Mains Prior to Pressure Testing Will Not Be Allowed. Preliminary testing of mains shall be done by the Contractor to ascertain if there are any major leaks. Final pressure tests shall be made in presence of the Engineer, who shall receive 24 hours notice prior to testing. The Contractor shall pressure test each 5000 foot section of water main as it is constructed or as directed by the Engineer. Pressure testing of each 5000 foot section shall be made in increments of 1500 feet or less.

Before applying the specified test pressure, all air shall be expelled from the pipe. If hydrants for blow off are not available at high points, the Contractor shall make the necessary taps to release the air and insert plugs after the test has been completed, or install corporation cocks and leave them in place after testing. The Engineer shall notify the Municipal Water Department prior to making connections to any existing water mains, filling of mains with water and flushing of any water mains. Reasonable use of water from City mains for purposes of testing will be available at no cost to the Contractor.

The Contractor shall furnish proper appliances and facilities for testing and draining the main without injury to the work and surrounding territory. The Contractor shall test by filling the main with clean water under minimum hydrostatic pressure of 150 lbs per square inch. In no case shall the leakage in any stretch of pipe being tested exceed the following amounts in a 2-hour period: All pipe installed on the project shall be tested in accordance with the requirements of ANSI / AWWA C600-05.

$$L=\frac{S x D x \sqrt{P}}{148{,}000}$$

Where;
L = Allowable Leakage (Gal./Hr.)
S = Length of Pipe (Ft.)
D = Nominal Diameter of Pipe Tested (Inches)
P = Average Test Pressure (PSIG)

For 6” pipe – 1.10 gallons per 1000 lineal feet per two hour period
For 8” pipe – 1.46 gallons per 1000 lineal feet per two hour period
For 10” pipe – 1.83 gallons per 1000 lineal feet per two hour period
For 12” pipe – 2.20 gallons per 1000 lineal feet per two hour period
For 14” pipe – 2.57 gallons per 1000 lineal feet per two hour period
For 16” pipe – 2.94 gallons per 1000 lineal feet per two hour period
For 18” pipe – 3.31 gallons per 1000 lineal feet per two hour period
For 20” pipe – 3.68 gallons per 1000 lineal feet per two hour period
For 24” pipe – 4.42 gallons per 1000 lineal feet per two hour period
For 30” pipe – 5.53 gallons per 1000 lineal feet per two hour period
For 36” pipe – 6.64 gallons per 1000 lineal feet per two hour period

In the event that a leak is detected and located, the Contractor shall review the method of repair with the engineer for concurrence before proceeding with the repair. After repairs are made the main will be retested. The Contractor shall notify the Engineer of his intent to retest at least 24 hours in advance. However, the Contractor shall not begin the retest until all attempts have been made to correct all defects, and approval for retesting has been given by the Engineer.

The City shall be responsible for all inspection costs for the first two hydrostatic tests of any section. If a section requires a third hydrostatic retest, the Contractor may be held liable for such inspection costs incurred by the City of Muskegon personnel.

13.06 ELECTRICAL CONDUCTIVITY

All ductile iron pipe and fittings furnished and installed under this contract shall be provided with electrical conductivity connections. Electrical conductivity connections shall be brass wedges, copper cable bond, copper strap bond, conductive push-on gaskets and megalug retainer glands as specified. After installation of the mains, backfilling and the hydrostatic pressure tests are completed, the system (pipe line and hydrants) shall be tested for electrical continuity and current capacity. It is imperative that all lines and appurtenances be filled with water prior to conductivity testing. The line will be tested in sections between hydrants and or stand pipes. The hydrants and hydrant valves will be opened to bleed off any air in the lead. The hydrant will then be closed and the hydrant valve left open. Adjacent hydrants or stand pipes will serve as test section termini. The Contractor will provide electric current of 100 to 150 amperes for the test. Direct current of 150 amperes, shall be passed through the pipe line for a period of five minutes. Current flow through the pipe shall be measured continuously on a suitable ammeter and shall remain steady without interruption or excessive fluctuation throughout the five minute test. Insufficient current or intermit ten current or arcing, indicated by large fluctuations of the ammeter needle, shall be evidence of defective electrical contact in the pipe line. The cause shall be isolated and corrected. Thereafter, the section in which the defective test occurred shall be retested as a unit and shall meet the test requirements to the satisfaction of the Engineer. All electrical connections shall be capable of carrying 60 amps. Any pipe cut and repaired with couplings shall have electrical connections. In addition to the above work the Contractor at the time the joint is made shall test each joint for contact effectiveness. The payment for electrical conductivity shall be included in the cost of the new water main. No other payment shall be made.

13.07 Tapping Existing Water Mains 4 Inch and Larger

All work relative to tapping existing water mains shall be under the supervision of the Water Department Superintendent. The Contractor, after proper notice and coordination, shall have at the site adequate personnel, equipment and materials to properly install the tapping sleeve and valve. The existing water main shall be exposed and the pipe cleaned to accept the tapping sleeve. The sleeve shall then be installed and valve attached. The Contractor shall then perform the pressure test at (150#) for five (5) minutes in the presence of the project Inspector. After testing, personnel from the Water Department will make the tap using City equipment. The Contractor will assist as necessary. No charges shall be made to the Contractor by the City for such described work.

13.08 CLEANING AND DISINFECTING

13.08.01 Flushing

After the pressure test, flush out the water main until the water runs clear. Each valve section of newly laid pipe should be flushed separately with water from existing water mains. All disinfecting shall be done in accordance AWWA Standard C651.

13.08.02 Disinfecting

Disinfect the pipe lines with chlorine. The preferable point of application of the chlorinating agent is at the beginning of the new pipe line, or any valve section of it and through the stand pipe or a corporation cock inserted in the horizontal axis of the newly laid pipe. Water from existing water mains should be controlled to flow very slowly into the newly laid pipe during application of chlorine. Partially open the end-most hydrant or valve on the section of pipe line under treatment to permit the flow of water through the pipe line. Continue treatment until the water flowing from the far end of the main contains a chlorine residual of at least 50 parts per million. Stop the flow of water and chlorine by closing appropriate openings. See Sections 13.08.05 and 13.08.06 for information on chlorine products and methods of application) A field test shall be done for determining that the proper amount of chlorine residual is in the new pipe line, the test shall be done by the Contractor with testing equipment approved by the Engineer.

13.08.03 Disinfecting Duration

Permit the treated water to remain in the pipe line for at least 24 hours, following which period the main shall be thoroughly flushed until all of the heavily chlorinated water is removed. The Contractor will test the water to see that this has been accomplished.

13.08.04 Sampling

The Engineer will schedule with the water filtration plant for sample pick-ups. (First sample pick-ups shall be done Monday through Thursday, no first sampling will be done Friday through Sunday) No flushing of the main being tested shall be done after the first sample is taken. A second sample shall be taken 24 hours after the first sample. A 48 hour test is required for each sample. If the results of the samples are unsafe, a repeat of the chlorine treatment and sampling is necessary. Sampling shall be taken one per city block but not to exceed 600 feet. Sampling should never be collected from hoses or fire hydrants, Sampling shall be from stand pipes or a corporation tap with a copper pipe extension. Sampling points shall have a valve and a copper gooseneck assembly. Cost of collecting samples and laboratory analysis shall be paid for by the City of Muskegon, up to a maximum of two tests per

section. Any additional testing will be at the Contractors expense. All materials, labor, equipment and tools for conducting the cleaning and disinfecting treatment shall be furnished by the Contractor without cost to the City.

13.08.05 Chlorine Products

Chlorine products for disinfecting water pipes are available in several forms. The most convenient forms are as follows:

A. Liquid Chlorine is available in 100 and 150 lb. steel cylinders. The pressure of the chlorine in the cylinder varies with the outside temperature and will usually be found to vary between 40 and 140 lbs. per square inch.

B. High test calcium hypochlorite is a power and is available in five pound cans and 155 pound drums. The chlorine is approximately 65% to 70% ("Perchloron" and "HTH" are commercial products).

C. Liquid laundry bleach is available in pint, quart, and gallon bottles at most grocery stores. The chlorine content is usually 5-1/4% ("Clorox" and "Roman Cleanser" are commercial products).

13.08.06 Liquid Chlorine Application

Liquid chlorine should be applied to water mains by means of solution feed chlorinating device with a power operated booster pump. High test calcium hypochlorite or liquid laundry bleach must be prepared as a water mixture for introduction into the water mains. The powder should be made into a paste and then thinned to about a 1% chlorine solution (10,000 parts per million). The preparation of a 1% chlorine solution requires the following proportions of powder or liquid laundry bleach to water.

Product	Amount of Compound	Gals. of Water
High test calcium Hypochlorite 65% to 70%	1 lb	7.50
Liquid laundry bleach 5-1/4%	1 gal	4.25

Prepare the 1% chlorine solution in a container and permit solids to settle. Apply the clear supernatant solution to the main by pumping through a power operated chemical feeder. The following table indicates the amount of chlorine required for each one hundred feet of various pipes.

Size of Pipe	Vol. gals. In 100 ft. pipe	Amounts of chlorine or chlorine solution per 100 ft of main for 50 p.p.m.

		Chlorine 100%	1% Chlorine Water Solution
4”	65.3	.027 lbs.	1/3 gal.
6”	146.5	.061 lbs.	3/4 gal.
8”	261.0	.108 lbs.	1-1/3 gal.
10”	408.0	.169 lbs.	2 gal.
12”	588.7	.240 lbs.	3 gal.
14”	798.3	.331 lbs.	4 gal.
16”	1044.0	.433 lbs.	5-1/3 gal.
18”	1321.2	.548 lbs.	6-3/4gal.
20”	1618.0	.670 lbs.	8-1/4 gal.
24”	2348.7	.973 lbs.	12 gal.
30”	3669.9	1.521lbs.	18-3/4 gal.
36”	5284.6	2.190 lbs.	27 gal.

13.09 METHOD OF MEASUREMENT AND PAYMENT

13.09.01 Water main Pipe

Water main Pipe shall be measured by lineal feet of pipe in place, including the lengths of fittings and valves, as measured along the center line of the pipe. At hydrant leads, water main pipe shall be measured by lineal foot from the centerline of the main to the centerline of the hydrant including fittings and valves.

13.09.02 Valves and Fittings

Valves and Fittings shall be paid for as “each”, and the unit price shall include the cost of all materials and accessories, testing installation, restraining devices and labor necessary for proper operation.

13.09.03 Restraining Devices

Restraining devices, thrust blocks, retainer glands, tie rods, etc., shall be incidental to the piping costs and the cost of which shall be included in the unit price for water mains and / or valves, fittings, etc.

13.09.04 Hydrants

Hydrants shall be paid for as “each”, and shall include all materials, accessories and labor to install this item in the proper manner. Hydrant valves shall be paid for separately as an “each” item but the cost of all the restraining devices is incidental and should be included in the cost of the pipe in place.

[Intentionally left blank]

SECTION 5

SPECIFICATIONS FOR STORM SEWER

5.01 DESCRIPTION OF WORK

The work shall consist of furnishing and installing storm sewer pipe of the specified size or sizes in a trench and shall include the construction of manholes, catch basins, and other appurtenant work. Excavating, trenching and backfilling shall be as specified in Section 2.

The work shall be performed in accordance with the specifications and drawings, the MDOT 2012 Standard Specifications for Construction and the following specifications.

5.02 MATERIALS

All materials furnished by the Contractor shall conform to the specifications which follow. Where reference specifications are used, they shall be considered as referring to the current edition or latest issue.

5.02.01 Sewer Pipe

All sewer pipe shall be of the materials and strengths shown on the Drawings or as specified.

5.02.01.01 Reinforced Concrete Sewer Pipe

Reinforced concrete sewer pipe, fittings, and accessories shall conform to the requirements of ASTM Designation C76 for the various classes specified.

Unless otherwise specified, joints for reinforced concrete sewer pipe shall be premium rubber joints conforming to the requirements of ASTM Designation C443.

5.02.01.02 Nonreinforced Concrete Pipe

Nonreinforced concrete pipe, fittings, and accessories shall conform to the requirements of ASTM Designation C14, Class 3, unless otherwise specified.

Unless otherwise specified, joints for non-reinforced concrete sewer pipe shall be premium rubber joints conforming to the requirements of ASTM Designation C443.

5.02.01.03 Reinforced Concrete Elliptical Pipe

Reinforced concrete elliptical pipe, fittings, and accessories shall conform to the requirements of ASTM Designation C507 for the various classes specified.

Unless otherwise specified, joints for reinforced concrete elliptical pipe shall conform to one of the following requirements:

Premium joints shall conform to one of the following requirements:

External sealing bands conforming to the requirements of ASTM Designation C877,

Soil tight joints shall conform to the following requirements:

Bituminous mastic conforming to the requirements of Section 909.09 of the MDOT 2012 Standard Specifications of Construction shall completely fill the annular space in the joint. Any excess mastic squeezed into the interior of the conduit shall be troweled smooth.

The joint surface shall also be evenly wrapped with a three (3) foot wide geotextile fabric meeting the requirements of Section 910.03A of the MDOT 2012 Standard Specifications of Construction, Geotextile Blanket for pipe wrap.

Geotextiles shall be stored, handled, and placed in accordance with the manufacturer's recommendations. Torn or punctured geotextiles shall not be used. Geotextile fabric which has deteriorated due to ultraviolet exposure (sunlight) during storage or has been damaged in placing will be rejected.

5.02.01.04 Reinforced Concrete Box Culverts

This section covers precast reinforced concrete box culverts and joints to be furnished and installed as specified and as shown on the drawings.

Box culverts shall be furnished and installed complete with all fittings, specials, jointing materials, and other necessary appurtenances.

Except as modified or supplemented herein, the manufacture and design of concrete box culvert shall be governed by the requirements of ASTM C1433, as applicable.

Unless otherwise specified herein, all materials used in the manufacture of culvert, fittings, and accessories shall conform to the requirements of ASTM C1433, as applicable.

Unless otherwise specified, joints for reinforced concrete box culverts shall conform to one of the following requirements:

Premium joints shall conform to one of the following requirements:

External sealing bands shall conform to the requirements of ASTM Designation C877. The width of the bands shall be thirteen (13) inches. External sealing bands shall be installed in accordance with the sealing band manufacturer's recommendations. Care shall be taken to ensure stretch of the band along the bottom surface of the conduit, and to prevent pulling of the sealing band into the bottom of the joint, by keeping the weight of the conduit off of the bedding until the sealing band is fully installed.

Soil tight joints shall conform to the following requirements:

Bituminous mastic conforming to the requirements of Section 909.09 of the MDOT 2012 Standard Specifications of Construction shall completely fill the annular space in the joint. Any excess mastic squeezed into the interior of the conduit shall be troweled smooth.

The joint shall surface shall also be evenly wrapped with a three (3) foot wide geotextile fabric meeting the requirements of Section 910.03A of the MDOT 2012 Standard Specifications of Construction, Geotextile Blanket for pipe wrap.

Geotextiles shall be stored, handled, and placed in accordance with the manufacturer's recommendations. Torn or punctured geotextiles shall not be used. Geotextile fabric which has deteriorated due to ultraviolet exposure (sunlight) during storage or has been damaged in placing will be rejected.

Except for fittings, bends, tees, and closure pieces, each piece of culvert shall be not less than six (6) feet long. Shorter length to help align precast holes may be allowed with the approval of the Engineer.

Joints shall conform to ASTM C1433, as applicable. Joint design shall be suitable for the joint sealing material to be used.

The total area of longitudinal steel reinforcement shall meet or exceed ASTM C1433. Longitudinal reinforcement shall be spaced uniformly around the culvert, and shall be continuous in each cage.

In no case shall the cover over the reinforcement be less than 5/8 inch, as measured from the internal surface or the external surface of the culvert, except the cover over the reinforcement for the external surface of the top slab of box culverts with less than two (2) feet of cover shall not be less than 1-5/8 inches.

In addition to the requirements of ASTM C1433, as applicable, each culvert and fitting shall have plainly and permanently marked thereon:

Identification of specials to show the location in the line.

On bends, the angle turned.

All bends, tees, closure pieces, wall fittings, end sections, and other fittings which are indicated on the drawings, or required to complete the work shall be furnished. Except as modified or otherwise provided herein, the design and manufacture of fittings shall be governed by the same requirements as the connecting culvert.

Concrete box culverts shall not be delivered to the site until concrete control cylinders representing such culverts shall have attained a compressive strength of at least eighty (80) percent of the specified minimum twenty-eight (28) day strength.

Concrete culvert and fittings shall be handled carefully and shall not be bumped or dropped. Hooks shall not be permitted to come in contact with joint surfaces. Use of lifting holes will be permitted with a minimum of four holes. Holes shall be plugged with non-shrink grout or other means acceptable to the Engineer, after installation.

Bedding for concrete box culverts shall be at least twelve (12) inches below the bottom of the box culvert on rock, and at least six (6) inches below the bottom of the box culvert laid on stable earth. The bedding shall be aggregate, thoroughly compacted to not less than ninety-five (95) percent of maximum unit weight – ninety-eight (98) percent if within the roadway influence – in accordance with MDOT procedures. Bedding material shall conform to the requirements of MDOT for 6A aggregate, or crushed concrete meeting the requirements for 22A aggregate, or approved equal. Bedding material shall extend a minimum of one (1) foot beyond the outside faces of the culvert.

Culvert laying shall begin at the lowest elevation, with the female ends facing the direction of laying, except when reverse laying is permitted by the Engineer.

The interior of all culvert and fittings shall be thoroughly cleaned before installation and shall be kept clean until the work has been accepted. All joint contact surfaces shall be kept clean until the joint is completed.

Jointing of precast concrete box culvert shall be as specified. Joints shall not be made when weather conditions may interfere with obtaining a satisfactory seal.

The gap width between successive box culvert sections after placement shall be a maximum of 3/4 inch at the nearest surfaces of the joint, and two (2) inches maximum at any other location as measured on the interior exposed edge of the joint. This permissible tolerance shall not affect the lines and grades and their permissible tolerances as shown on the drawings and specified.
Box culverts delivered to the job site with any patching shall not be accepted. If the Contractor wishes to seek acceptance for a patched box culvert, it must be

inspected by the Engineer prior to patching at the point of manufacture, and accepted subject to an approved method of patching.

Drawings, specifications, schedules, and other data showing complete details of the fabrication and construction of box culvert and fittings, together with complete data covering all materials proposed for use, shall be submitted for approval. The drawings and data shall include, but not be limited to, the following for each size culvert:

Details of joints.

Details of fittings and specials.

Details of end sections and tees.
Test reports.

Laying schedules.

Details of reinforcement at openings in the top or sides of the box culvert.

5.02.01.05 Corrugated Metal Pipe

Corrugated metal pipe shall conform to the applicable requirements of Sections 401 and 402 of the MDOT 2012 Standard Specifications of Construction for the various types and gauges specified.

Premium soil tight joints will be required.

5.02.01.06 Smooth Lined Corrugated Polyethylene Pipe

Smooth Lined Corrugated Polyethylene Pipe in sizes up to forty-eight (48) inch diameter shall conform to the requirements of AASHTO M-294, Type S. The material shall have a minimum resin cell classification of 335420 C as determined under ASTM Designation D3350. Pipe shall have annular corrugations, and joints shall have integral bell & spigot with gaskets. Gaskets shall be placed in annular corrugations. Gaskets shall be solid cross section rubber seals conforming to ASTM Designation F477. A protective removable shrink wrap material shall be placed on all exposed gaskets at the factory. Gaskets and sleeves shall be lubricated prior to insertion as required by the pipe manufacturer. Pipe fittings shall conform to AASHTO M-294. Installation and testing shall be as required in Section 2, "Excavating, Trenching, and Backfilling for Utilities", except a minimum of three (3) feet of cover shall be maintained over any pipe during construction staging when construction equipment is crossing the pipe. The cost of temporary cover shall be incidental to the item of work.

5.02.01.07 Polyvinyl Chloride (PVC) - (Roof Drain Laterals Only)

Solid wall PVC plastic pipe shall be extra strength conforming to the requirements of ASTM D3034, with a standard dimension ratio of 23.5 (SDR-23.5).

Joints for PVC plastic may be chemically welded. Manufacturers are required to "guide line" the uncoupled end of each joint of pipe so that in the field, it can be visually determined that the joint is properly made up.

Joints for PVC shall be integral bell & spigot design.

Polyvinyl Chloride (PVC) solid wall schedule 80, ASTM D1785, is also permitted.

5.02.02 Roof Drain Laterals

All roof drain laterals shall be extra strength pipe, and unless otherwise specified, shall be of any material specified in Paragraph 5.02.01. Where bends or curves are specified they shall be smooth long radius type curve. No mitered or segmented type bends will be approved.

5.02.03 Wyes and Tees

Wyes and Tees shall be cast fittings of the same material and joints as the main sewer, or may be an approved fabricated special fitting which provides a suitable connection for the lateral to the main sewer.

Details of special fittings and/or adaptors for connecting laterals of a material different from the main sewer shall be approved by the Engineer before they are manufactured.

Wyes and tees will be required as follows:

6" Wyes on main sewer of 8" or 10" diameter;
6" Wyes or Tees on main sewer of 12" diameter or larger.

5.02.04 Plugs and Stoppers

Plugs or stoppers for plugging the ends of laterals, risers or storm sewers, which are not extended shall make a water tight seal. Design shall be such that they can be readily removed without damage to the pipe.

5.02.05 Underdrains

Materials for underdrains shall conform to the requirements of Section 404 of the MDOT 2012 Standard Specifications of Construction.

5.02.06 Cement Mortar

Mortar shall consist of one part of Air Entraining Portland Cement, and two parts of masonry sand. These proportions shall be measured by volume.

The sand and cement shall be mixed dry in a clean tight box until a mixture of uniform color is produced, after which water shall be added until the required consistency is obtained. Mortar shall be mixed only in such quantities as needed for immediate use. The retempering of mortar will not be permitted.

5.02.06.01 Cement

Air Entraining Portland Cement shall conform to the requirements for Type 1A of the MDOT 2012 Standard Specifications for Construction for Air Entraining Portland Cement, ASTM Designation C150.

5.02.06.02 Masonry Sand

Masonry Sand shall conform to the requirements of "Natural Sand, 2MS" of the MDOT 2012 Standard Specifications for Construction.

5.02.06.03 Water

Water for mixing mortar shall be obtained from the public water supply unless otherwise approved by the Engineer.

5.02.07 Concrete

Concrete for pipe encasement, special pipe embedment, manhole bases and similar items shall meet the requirements of the 2012 MDOT Standard Specifications for Construction for Grade S3 concrete. Grade S3 concrete shall have the strength of 3,000 psi at 28 days.

5.02.08 Manhole and Catch Basin Materials

5.02.08.01 Adjusting Rings

Precast grade adjusting rings shall conform to the requirements of ASTM Designation C478.

5.02.08.02 Precast Units

Precast reinforced concrete manhole risers and precast reinforced concrete manhole conical top sections shall conform to the requirements for reinforced concrete manhole risers and tops, ASTM Designation C478.

Joints for precast sections shall be premium rubber, butyl rubber composition seals, "RAM-NEK", or approved equal.

5.02.08.03 Castings

Castings shall meet the requirements specified in the MDOT 2012 Standard Specifications for Construction Section 908. Manhole covers and rings and similar combinations of castings shall be machined to provide an even bearing.

Unless otherwise specified, manhole castings shall be East Jordon No. 1120 with Type A solid cover, or approved equal.

Unless otherwise specified, catch basin castings at curb inlets shall be East Jordan No. 7020, with Type M2 grate and Type T1 back, or approved equal.

5.02.08.04 Steel Reinforcement

Steel reinforcement shall conform to the requirements for steel reinforcement of Section 905 of the MDOT 2012 Standard Specifications for Construction.

5.02.08.05 Manhole Steps

Unless otherwise specified, manhole steps shall be plastic coated steel steps conforming to the requirements of ASTM Designation C478, or approved equal, spaced at 16" on center.

5.03 INSPECTION OF MATERIALS BY CONTRACTOR

It shall be the responsibility of the Contractor to inspect all materials for cracks, flaws or other defects before they are incorporated into the work. Any materials found to be defective or damaged, shall be promptly removed from the job site.

5.04 LAYING PIPE

5.04.01 Alignment and Grade

5.04.01.01 Laser Method

The Contractor shall use the laser beam method of maintaining line and grade for sewer construction, unless otherwise approved by the Engineer. The Contractor shall submit evidence to the Engineer that a qualified operator will handle the laser beam equipment during the course of construction.

The Engineer shall place line and grade stakes at each manhole, or more often, as determined by the Engineer. The Contractor shall check the line and grade at very point at which a stake has been placed.

5.04.02 Handling

Pipe shall be protected during unloading and handling against impacts, shocks and free fall. Pipe handled on skid-ways shall not be skidded or rolled against pipe already on the ground.

Pipe shall be carefully lowered into the trench in such a way as to avoid danger to the workmen or damage to the pipe.

5.04.03 Direction of Laying

Excavation of trenches and laying of pipe shall begin at the outlet for the sewer and proceed upgrade with the individual pipe being laid with the spigot end downstream.

5.04.04 Placing

Unless otherwise specified, installation of precast concrete sewer, storm drain, and culvert pipe shall conform to the requirements of ASTM Designation C1479, as applicable.

The pipe shall be placed on the prepared sub-grade and held firmly in place during subsequent pipe jointing and embedment operations. Successive pipes shall be carefully positioned so that when laid they form a sewer with a uniform invert true to line and grade.

Sufficient pressure shall be applied by an approved method to each pipe as it is laid to ensure that the spigot is all the way home in the bell. Care shall be exercised to prevent joints from opening up as successive lengths of pipe are placed. The Contractor shall take the necessary precautions when using a trench box to prevent joint separation when the box is pulled ahead.

5.04.05 Cleaning Sewer

The interior of the sewer shall be cleaned of all jointing material, dirt and debris as the work progresses.

In small sewers where cleaning after laying may be difficult, a swab or drag may be required in the pipe line to satisfactorily complete this work. Where possible, a plug shall be installed on the downstream end of the sewer to prevent any sand and debris from entering the existing sewer.

5.05 PIPE JOINTS

Pipe joints shall be made in strict accordance with the pipe manufacturer's recommendations unless otherwise specified herein. All lubricants, gaskets and other materials required to make the joints shall be supplied or recommended by the pipe manufacturer and approved by the Engineer.

Pipe layers shall be fully qualified and experienced in the work being performed and shall check each joint after it is completed to see that no part of the joint material is left on the inside of the pipe and that the joint is properly made.

5.06 LOCATION OF WYES AND TEES

The approximate locations of wyes or tees are shown on the Drawings. These locations may be adjusted where necessary to best serve the various properties. Exact locations will be determined by the Engineer before the wyes or tees are installed.

The Contractor shall keep an accurate record of measurements from the nearest downstream manhole to each wye or tee which is installed, the length of each lateral, and the depth at the end of each lateral. These measurements shall be recorded on the record drawings to be furnished by the Contractor.

5.07 ROOF OR FOOTING DRAIN LATERALS

5.07.01 General

Installation of roof/footing drain laterals shall meet all requirements specified for storm sewers. All laterals shall be inspected by the Engineer before the trench is backfilled. The end of all laterals shall be properly sealed with a standard stopper or plug, unless directed otherwise by the Engineer.

5.07.02 Length

All roof/footing drain laterals shall be laid at right angles to the storm sewer main line and shall extend to a point one foot outside the street right-of-way (property line) unless otherwise directed. No payment will be made for pipe laid beyond this point unless specifically ordered by the Engineer.

The Contractor shall measure and record the horizontal length of the lateral from the main line sewer to the end of the lateral and provide this information to the Engineer.

5.07.03 Grade

The roof/footing drain lateral shall be laid with a rise of one-quarter (1/4) inch per foot unless otherwise directed.

5.07.04 Markers and Measurements

After installation of the roof/footing drain lateral, but prior to backfilling, the Contractor shall provide and install a 2" x 2" wood marker for each service. The wood markers shall be set vertically from the end of the lateral to twelve (12) inches above finish surface elevations. Also, a 1/2" diameter by 3' long metal stake shall be placed vertically and adjacent to the wood marker with 6" cover. The

Contractor shall assist the Construction Observer in locating the end of each lateral and in recording the location by measuring to the nearest downstream manhole.

After the record locations have been recorded and checked by the Construction Observer, the Contractor shall cut off the markers as follows: in improved areas, the markers shall be cut off two inches below grade; and in undeveloped areas, the markers shall be cut off six inches above grade.

5.08 MANHOLE AND CATCH BASIN CONSTRUCTION

Manholes and catch basins shall be constructed in accordance with the standard details and as specified herein.

Unless otherwise specified, or approved by the Engineer, all manholes and catch basins shall be precast.

Precast bases shall be installed on the subbase in such a way as to provide a uniform bearing under the manhole base.

Precast concrete adjusting rings shall be used to bring existing and new drainage structure covers within the proposed pavement to grade. After the cover is brought to grade, the entire hole created by excavating to raise the casting shall be filled in three-inch (3") lifts with Hot Mix Asphalt Mixture 3C or 13A to the top of the leveling course and air tamped to achieve proper compaction. Special care shall be taken to prevent debris from entering sewers.

Precast manholes and catch basins with integral bottom and channel may be used; however, any changes to the structure due to minor field adjustments of alignment and/or grade required to meet construction conditions, shall be made by the Contractor at no additional cost to the Owner.

Stubs shall be provided in manholes for future connections as shown on the Drawings or as directed by the Engineer. All such stubs shall be sealed with standard plugs or brick bulkheads, in accordance with Section 403.03 of the MDOT 2012 Standard Specifications for Construction.

5.09 CUT-INS

When cutting into an existing manhole, the opening shall be no larger than is necessary to admit the new sewer. All broken or surplus materials falling inside the structure shall be removed. The opening around the pipe shall then be properly sealed with brick and mortar or by other approved means which will result in a water tight and durable repair to the structure.

Flow channels shall be constructed as specified or as directed to accommodate the sewer being cut in.

Cut-ins to existing manholes shall be considered included in the major items of work and no specific payment will be made therefor.

5.10 ACCEPTANCE TESTS

5.10.01 Alignment and Grade

Each section of sewer may be checked by the Engineer for alignment and grade using lights and mirrors, television inspection, or other similar means. The Contractor shall assist the Engineer in the performance of these tests when necessary.

5.10.02 Pipe Deflection Tests (Flexible Pipe Only)

Flexible pipe is any pipe having a pipe stiffness of less than 115 psi. as defined under the requirements of ASTM Designation D2412.

The completed installation of flexible pipe shall at no point have out-of-round deflections in the main sewer pipe greater than five percent (5%) of the pipe's actual original inside diameter. Go/no go gauging tests, using an approved pointed mandrel with a minimum of nine (9) points, shall be performed by the Contractor in the presence of the Engineer, or his authorized representative after the trench is backfilled and before the surface restoration is begun. Pipe with deflections greater than five percent (5%) shall be re-laid by the Contractor at no additional expense to the Owner. Use of mechanical devices or equipment to complete the go/no go tests and vibratory re-rounding of failed sections are prohibited. A minimum of 30 days shall elapse between installation with backfilling and deflection testing.

5.11 MEASUREMENT AND PAYMENT

5.11.01 General

All proposed construction shall be measured for payment by the Engineer in accordance with the items listed in the proposal.

The unit price bid for each proposal item shall be payment in full for completing the work, ready for use as specified.

5.11.02 Storm Sewers

Measurement of the length of the sewer shall be in lineal feet along the centerline of the sewer from center to center of manhole or catch basin structures.

Where depth classifications are provided, the depth of the sewer connecting two adjacent structures shall be considered as being the average of the depth from earth grade to the sewer invert at these structures.

5.11.03 Manholes and Catch Basins

Manholes and catch basins shall be paid for in accordance with the units established in the proposal. When no proposal item is provided for castings, the work shall be considered part of the major items of work.

5.11.04 Wyes or Tees

When a specific item is provided in the proposal for Wyes or Tees the unit price bid shall be the additional cost of furnishing and placing the wye or tee over and above the cost of furnishing and laying the sewer pipe.

When no proposal item is provided, the work shall be considered part of the major items of work.

5.11.05 Roof or Footing Drain Laterals

The length of roof/footing drain laterals shall be measured horizontally from the center of the main sewer to the end of the lateral as specified.

5.11.06 Cut-Ins

Cut-ins shall be considered part of the major items of work and no specific payment will be made therefor.

5.11.07 Stubs

Stubs shall be considered part of the major items of work and no specific payment will be made therefor.

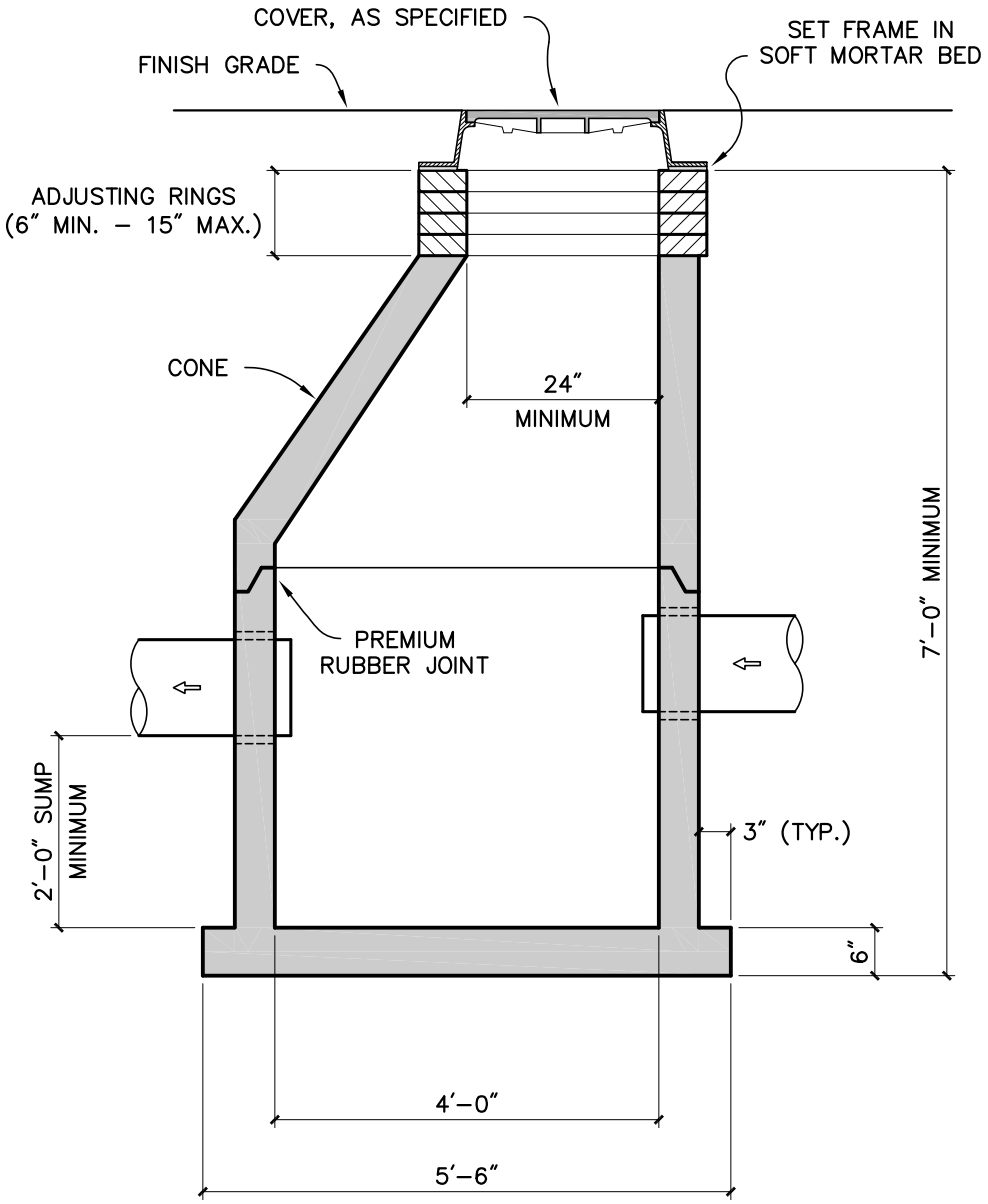

STANDARD CATCH BASIN

(PRECAST CONCRETE)

NOTES

1. PRECAST CONCRETE CATCH BASIN SHALL MEET ASTM C478.
2. IF BOTTOM IS PRECAST CONCRETE, SET ON MINIMUM 4" SAND SUBBASE (CIP) OR CLASS 1A CRUSHED STONE WRAPPED WITH GEOTEXTILE FABRIC.
3. STD. 4'–0" DIAMETER INLET SAME AS CATCH BASIN WITHOUT SUMP.

Prein&Newhof
09/2012
Section 5 Storm Sewer

H:_SPECIFICATION DRAWINGS\SECTION 5 - STORM SEWER\14_SS_STORM_STANDARD CATCH BASIN PRECAST.DWG - WDS - Sep. 17 2012 - 04:47pm - Prein&Newhof

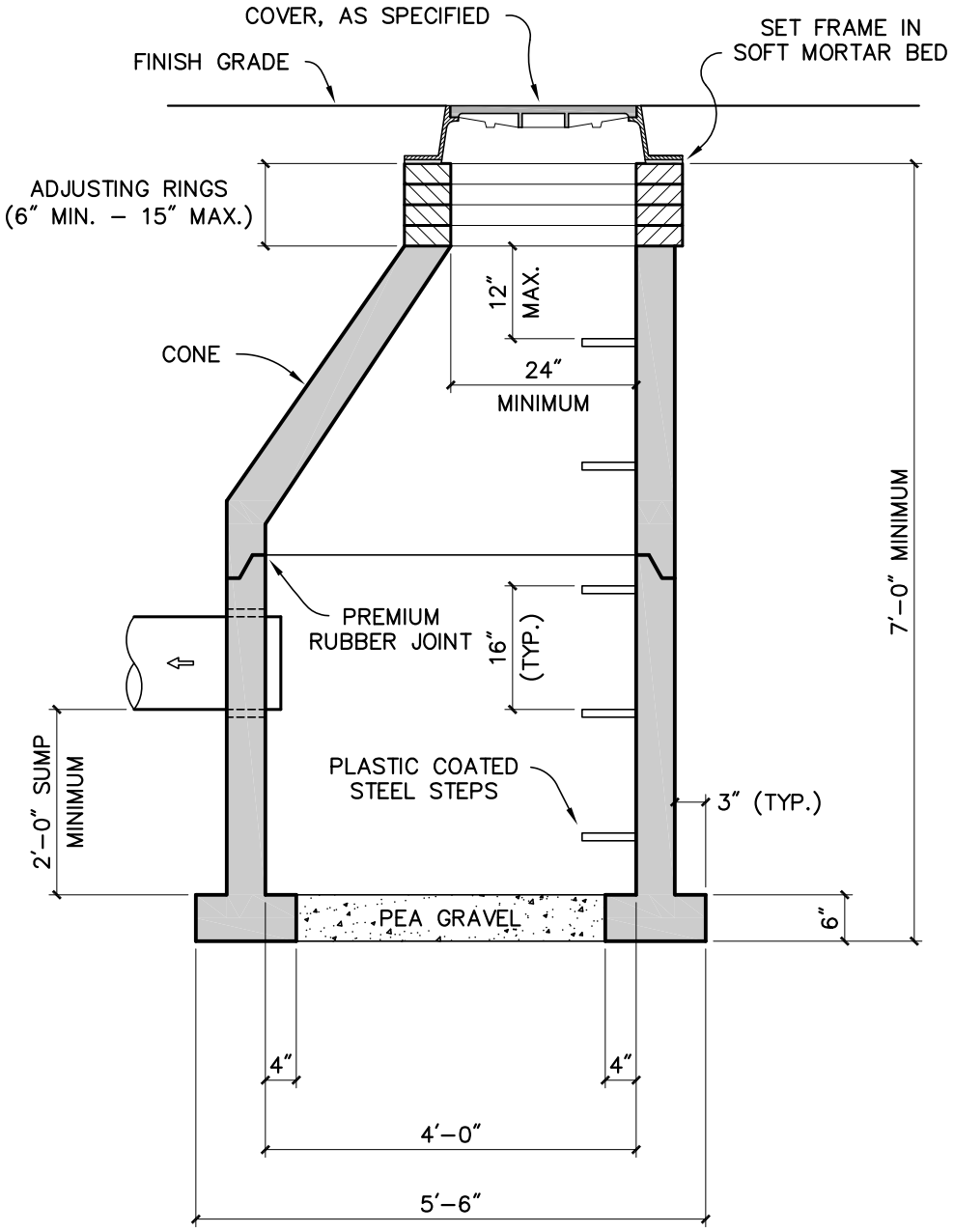

DRYWELL CATCH BASIN

(PRECAST CONCRETE)

NOTES

1. PRECAST CONCRETE CATCH BASIN SHALL MEET ASTM C478.
2. IF BOTTOM IS PRECAST CONCRETE, SET ON MINIMUM 4″ SAND SUBBASE (CIP) OR CLASS 1A CRUSHED STONE WRAPPED IN GEOTEXTILE FABRIC.
3. STD. 4′–0″ DIAMETER INLET SAME AS CATCH BASIN WITHOUT SUMP.

Prein&Newhof
09/2012
Section 5 Storm Sewer

H:_SPECIFICATION DRAWINGS\SECTION 5 - STORM SEWER\15_S5_STORM_DRYWELL CATCH BASIN PRECAST.DWG - WDS - Sep, 17 2012 - 04:53pm - Prein&Newhof

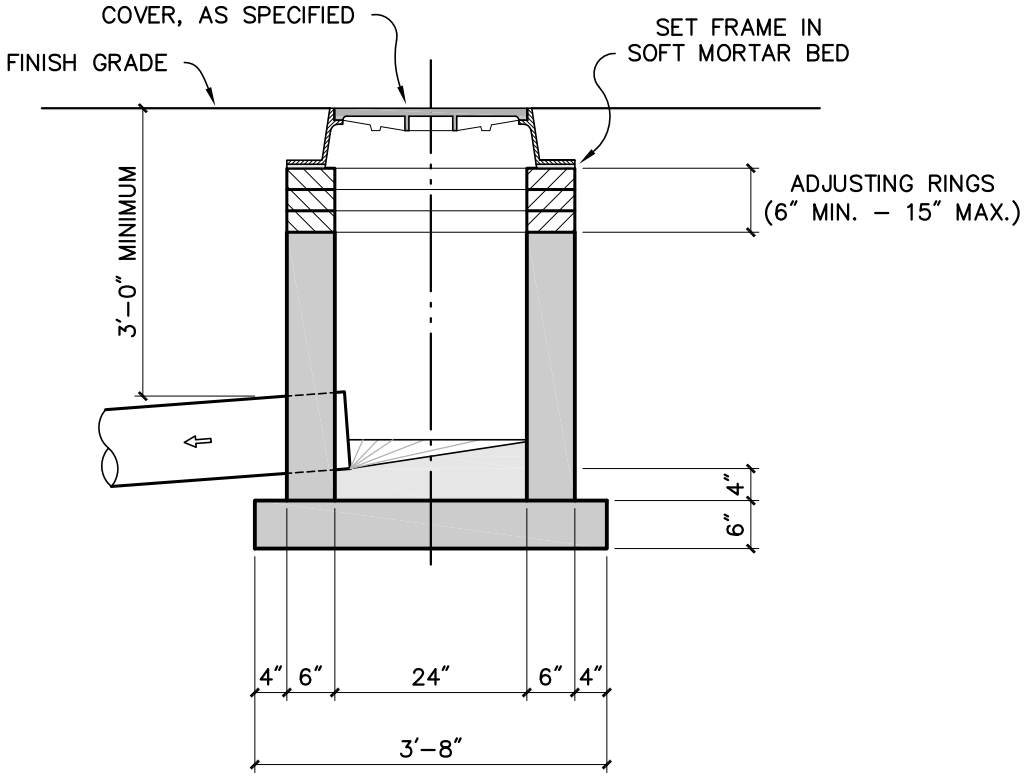

2' DIAMETER INLET

NOTE

1. PRECAST CONCRETE INLET SHALL MEET ASTM C478.
2. IF BOTTOM IS PRECAST CONCRETE, SET ON MINIMUM 4" SAND SUBBASE (CIP) OR CLASS 1A CRUSHED STONE WRAPPED WITH GEOTEXTILE FABRIC.

H:_SPECIFICATION DRAWINGS\SECTION 5 - STORM SEWER\16_S5_STORM_INLET.DWG - WDS - Sep, 18 2012 - 07:51am - Prein&Newhof

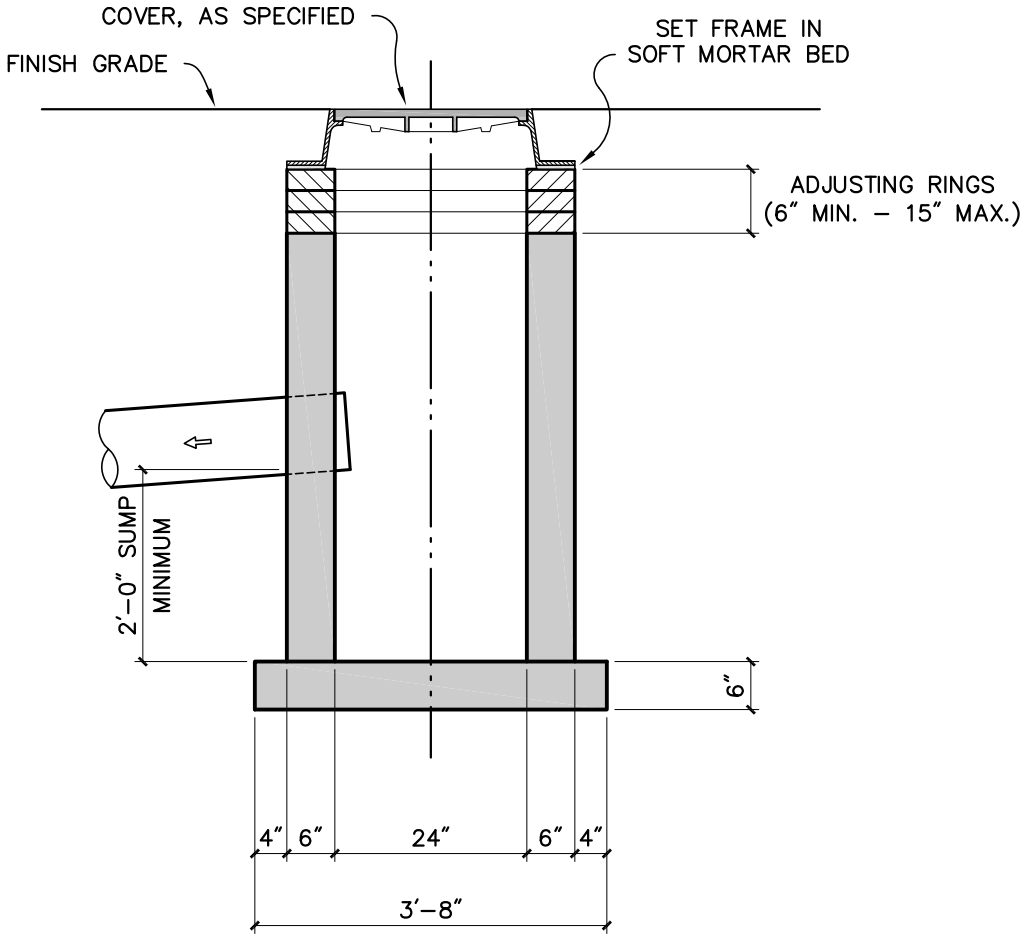

2' DIAMETER INLET w/SUMP

NOTE

1. PRECAST CONCRETE INLET SHALL MEET ASTM C478.
2. IF BOTTOM IS PRECAST CONCRETE, SET ON MINIMUM 4" SAND SUBBASE (CIP) OR CLASS 1A CRUSHED STONE WRAPPED WITH GEOTEXTILE FABRIC.

H:_SPECIFICATION DRAWINGS\SECTION 5 - STORM SEWER\17-S5_STORM_INLET WITH SUMP.DWG - WDS - Sep, 18 2012 - 07:54am - Prein&Newhof

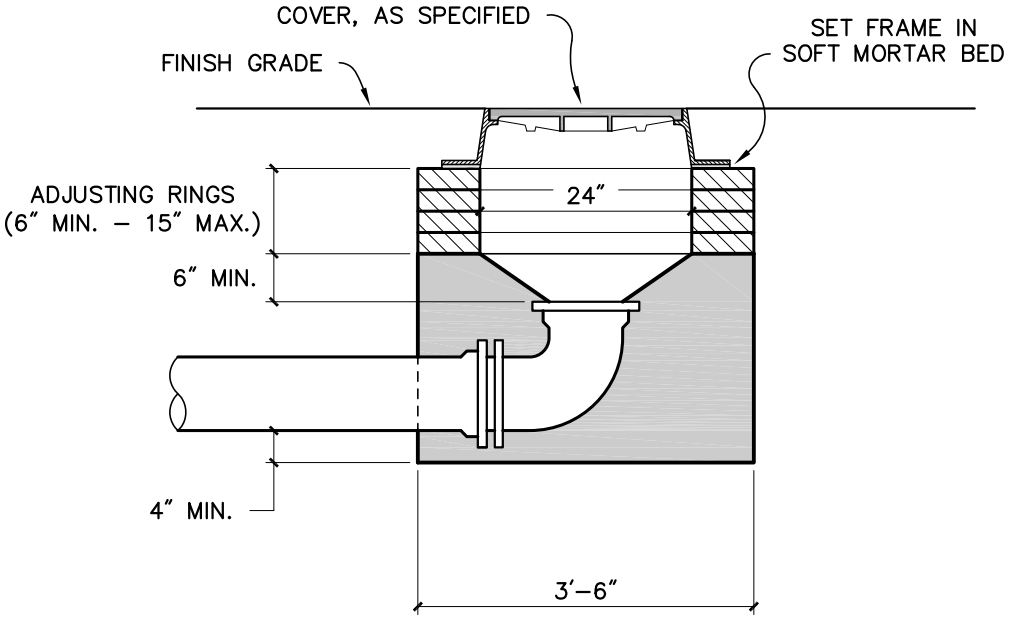

CURB INLET

NOTE

ALSO SEE "STANDARD CATCH BASIN"
PLANS FOR STD. 4'–0" DIA. INLETS

H:_SPECIFICATION DRAWINGS\SECTION 5 - STORM SEWER\18_S5_STORM_CURB INLET.DWG - WDS - Sep, 18 2012 - 07:55am - Prein&Newhof

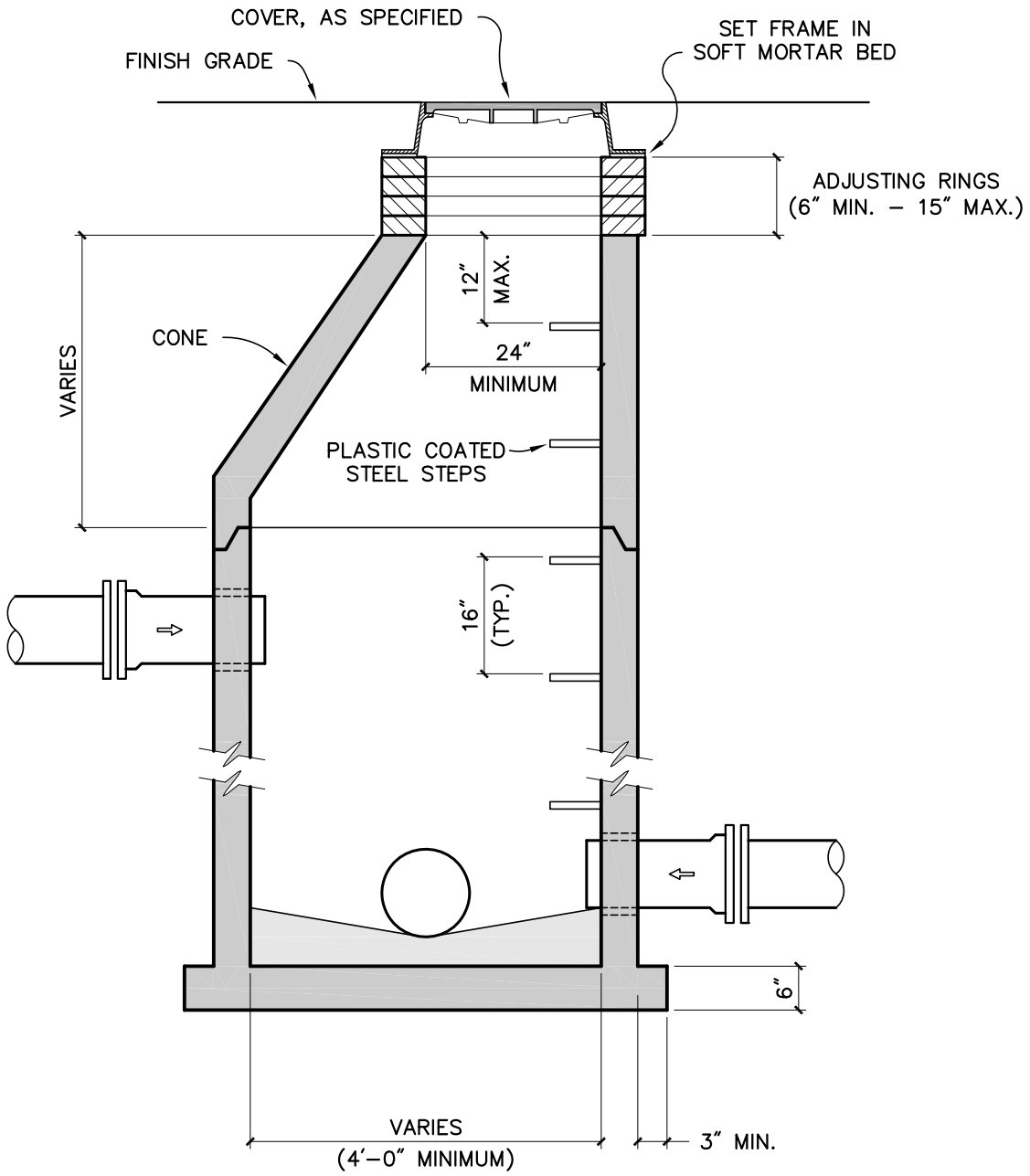

STANDARD STORM SEWER MANHOLE

(PRECAST CONCRETE)

NOTES

1. PRECAST CONCRETE MANHOLE SHALL MEET ASTM C478.
2. IF BOTTOM IS PRECAST CONCRETE, SET ON MINIMUM 4" SAND SUBBASE (CIP) OR CLASS 1A CRUSHED STONE WRAPPED IN GEOTEXTILE FABRIC.
3. CONE MAY BE ROTATED TO ALIGN STEPS TO VARIOUS LOCATIONS IN MANHOLE.

Prein&Newhof
09/2012
Section 5 Storm Sewer

H:_SPECIFICATION DRAWINGS\SECTION 5 - STORM SEWER\19-SS_STORM_MANHOLE PRECAST.DWG - WGS - Sep, 18 2012 - 08:02am - Prein&Newhof

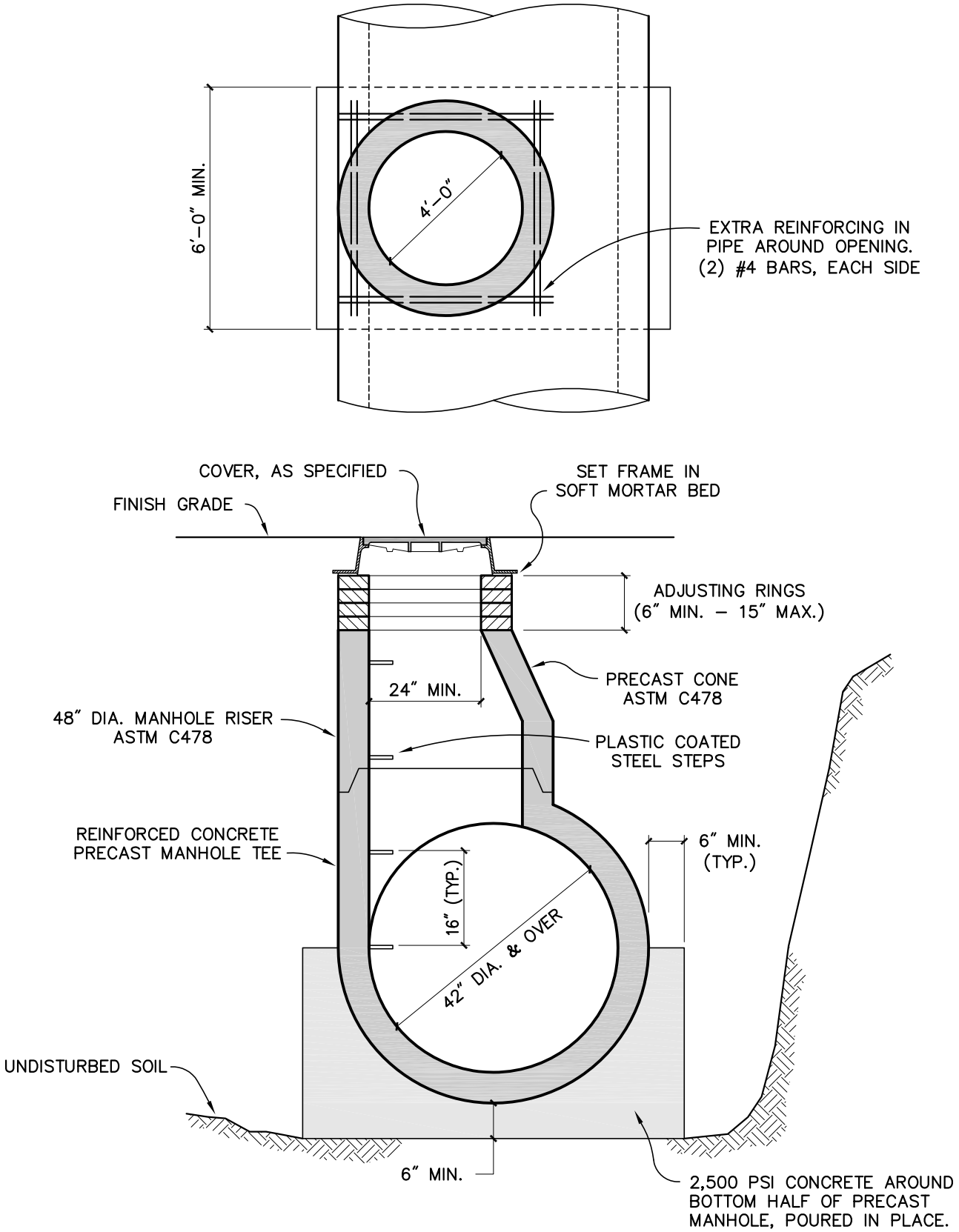

STANDARD STORM SEWER TEE MANHOLE

H:_SPECIFICATION DRAWINGS\SECTION 5 - STORM SEWER\20-S5_STORM_TEE MANHOLE.DWG - WDS - Sep, 18 2012 - 08:06am - Prein&Newhof

Prein&Newhof
09/2012
Section 5 Storm Sewer

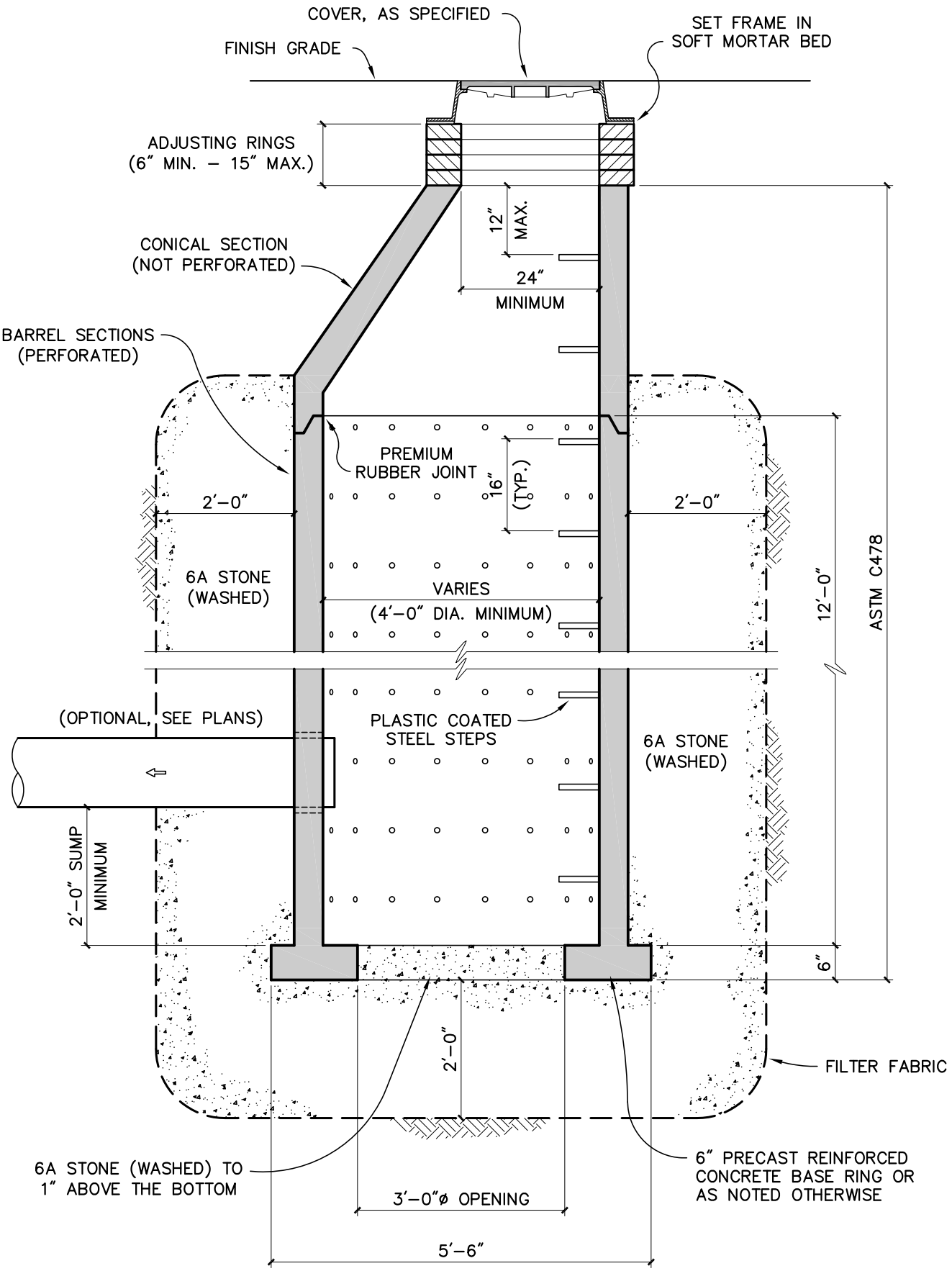

LEACHING BASIN

Prein&Newhof
09/2012
Section 5 Storm Sewer

H:_SPECIFICATION DRAWINGS\SECTION 5 - STORM SEWER\21-SS_STORM_LEACHING BASIN.DWG - WDS - Sep, 18 2012 - 08:11am - Prein&Newhof

[Intentionally left blank]

SECTION 6

SPECIFICATIONS FOR SANITARY SEWER

6.01 DESCRIPTION OF WORK

The work shall consist of furnishing and installing sanitary sewer pipe of the specified size or sizes in a trench and shall include the construction of manholes, lateral connections to the abutting property and other appurtenant work. Excavating, trenching and backfilling shall be as specified in Section 2.

The work shall be performed in accordance with the specifications and drawings, the MDOT 2012 Standard Specifications for Construction and the following specifications.

6.02 MATERIALS

All materials furnished by the Contractor shall conform to the specifications which follow. Where reference specifications are used, they shall be considered as referring to the current edition or latest issue. Certified test reports for strength from the manufacturer shall be submitted to the Engineer when the pipe is delivered to the site.

6.02.01 Sewer Pipe

All sewer pipe shall be of the materials and strengths shown on the drawings or as specified.

6.02.01.01 Clay Sewer Pipe

Clay sewer pipe may be used only when specifically approved by the Owner and Engineer. If approved, clay sewer pipe shall meet the following:

Extra strength clay sewer pipe shall conform to the requirements of ASTM Designation C700.

Joints for clay sewer pipe shall be of resilient materials conforming to the requirements of ASTM Designation C425.

6.02.01.02 Concrete Sewer Pipe (12" Diameter and Larger Only)

Concrete sewer pipe may be used only when specifically approved by the Owner and Engineer. If approved, concrete sewer pipe shall meet the following:

Non-reinforced concrete pipe, fittings, and accessories shall conform to the requirements of ASTM Designation C14, Class 3.

Reinforced concrete sewer pipe shall conform to the requirements of the current specifications of the ASTM for reinforced concrete culvert, storm drain and sewer pipe, Designation C76 for the various classes specified.

Joints for concrete sewer pipe shall be premium rubber joints conforming to the requirements of ASTM Designation C443, except the infiltration and exfiltration allowance shall be as specified herein.

6.02.01.03 Polyvinyl Chloride (PVC) Solid-Wall Pipe

Polyvinyl chloride (PVC) solid-wall pipe less than 18 inches in diameter shall conform to the requirements of ASTM Designation D3034, with a standard dimension ratio of 35 (SDR-35).

Polyvinyl chloride (PVC) solid-wall pipe 18 inches in diameter and larger shall conform to the requirements of ASTM Designation F679, with a standard dimension ratio of 35 (SDR-35).

Extra strength pipe shall conform to the requirements of ASTM Designation D3034, with a standard dimension ratio of 26 (SDR-26). Extra strength pipe shall be required for installations over 18 feet deep based on the average depth of the manholes for each section of pipe.

Joints shall be flexible elastomeric sealed type joint in accordance with ASTM D3212.

6.02.01.04 Polyvinyl Chloride (PVC) Composite (Truss) Pipe

Polyvinyl Chloride (PVC) Composite (Truss) Pipe shall conform to the requirements of ASTM Designation D2680.

Joints shall be flexible elastomeric sealed type joint in accordance with ASTM D3212.

6.02.01.05 Profile Polyvinyl Chloride (PVC) Pipe

Profile polyvinyl chloride (PVC) pipe shall conform to the requirements of ASTM Designation D794. Pipe shall have a minimum pipe stiffness designation of “PS-46” or greater. If no specific pipe is specified in project specification, the Contractor shall use a closed profile pipe. All profile PVC pipe shall conform to the ASTM requirements specific for the specified pipe.

Joints shall be flexible elastomeric sealed type joint in accordance with ASTM D3212.

6.02.01.06 Ductile Iron Pipe

Ductile iron pipe shall conform to the requirements of AWWA C151 (ANSI

A21.51), and shall be Class 53, unless otherwise specified. All pipe and fittings shall have a cement mortar lining conforming to the requirements of AWWA C104 (ANSI A21.4), unless otherwise specified. Epoxy lining may be used when approved by the Engineer.

Joints shall be rubber gasket joints conforming to the requirements of AWWA C111 (ANSI A21.11). Joints on fittings shall be bolted mechanical joints.

When laying ductile iron pipe in corrosive type soils, the pipe shall be encased in a seamless polyethylene tube in accordance with AWWA C105 (ANSI A21.5) of eight (8) mills minimum thickness. The ends of adjacent sections of polyethylene tubing shall be overlapped a minimum of one (1) foot, and the joint taped or otherwise secured to prevent displacement during backfill operations.

6.02.02 Sanitary Sewer Laterals

All sewer laterals shall be extra strength pipe, and unless otherwise specified, may be of any material specified in Paragraph 6.02.01. Any specified bends or curves shall be smooth, long-radius type curves. No mitered or segmental type bends will be approved.

6.02.03 Wyes and Tees

Wyes and Tees may be cast fittings of the same material and joints as the main sewer, or may be an approved fabricated special fitting which provides a suitable connection for the lateral to the main sewer.

Details of special fittings and/or adapters for connecting laterals of a material different from the main sewer shall be approved by the Engineer before they are manufactured.

Wyes and Tees will be required as follows:

6" Wyes on main sewer of 8" or 10" diameter
6" Wyes or Tees on main sewer of 12" diameter or larger
6" Inserta-Tee, or approved equal, on main sewer of 24" diameter or larger.

6.02.04 Plugs and Stoppers

Plugs, stoppers or glued caps for plugging the ends of laterals or risers which are not extended shall make a water tight seal and shall be of such a design that they can be readily removed without damage to the pipe.

Plugs, stoppers or glued caps shall be installed at the connection point(s) to the existing sewer system to protect existing sewer lines from contamination. The plugs, stoppers or caps shall not be removed until the new system is approved by the Owner.

6.02.05 Cement Mortar

Mortar shall consist of one part Air Entraining Portland Cement, and two parts masonry sand. These proportions shall be measured by volume.

The sand and cement shall be mixed dry in a clean tight box until a mixture of uniform color is produced, after which water shall be added until the required consistency is obtained. Mortar shall be mixed only in such quantities as needed for immediate use. The retempering of mortar will not be permitted.

6.02.05.01 Cement

Air Entraining Portland Cement shall conform to the requirements for Type 1A of the MDOT 2012 Standard Specifications for Construction for Air Entraining Portland Cement, ASTM Designation C150.

6.02.05.02 Masonry Sand

Masonry Sand shall conform to the requirements of "Natural Sand, 2MS" of the MDOT 2012 Standard Specifications for Construction.

6.02.05.03 Water

Water for mixing mortar shall be obtained from the public water supply unless otherwise approved by the Engineer.

6.02.06 Concrete

Concrete for pipe encasement, special pipe embedment, manhole bases and similar items shall meet the requirements of the MDOT 2012 Standard Specifications for Construction for Grade S3 concrete. Grade S3 concrete shall have the strength of 3,000 psi at 28 days.

6.02.07 Manhole Materials

6.02.07.01 Adjusting Rings

Precast grade adjusting rings shall conform to the requirements of ASTM Designation C478.

6.02.07.02 Precast Units

Unless otherwise specified, all manholes shall be precast and water tight.

Precast reinforced concrete manhole risers and precast reinforced concrete manhole conical top sections shall conform to the requirements of ASTM C478, Precast Reinforced Concrete Manhole Sections. Bituminous waterproofing shall be applied to outer surface of manhole at a rate of one gallon per 100 square feet. Manholes shall be free of holidays and open pinholes.

Joints for precast sections shall be premium rubber, butyl rubber composition seals, "RAM-NEK", or approved equal.

6.02.07.03 Castings

Castings shall meet the requirements specified in the MDOT 2012 Standard Specifications for Construction Section 908. Manhole covers and rings and similar combinations of castings shall be machined to provide an even bearing.

Unless otherwise specified, manhole castings shall be provided with 24 inch openings and shall be East Jordan No. 1040 with Type A solid cover, or approved equal.

Where indicated on the plans, water-tight manhole covers shall be East Jordan No. 1040 WT, with Type A solid cover, or approved equal.

6.02.07.04 External Casting and Adjusting Ring Seals

The casting frame, adjusting rings and top section of all manholes shall be wrapped with a watertight seal joint encapsulation system with rubber backing to minimize infiltration into the manhole. Material shall be Infi-Shield External Uni-band Seal by Sealing Systems, Wrapid Seal by CANUSA-CPS, or approved equal. Installation shall follow manufacturer's recommendations.

6.02.07.05 Steel Reinforcement

Steel Reinforcement shall conform to the requirements for steel reinforcement of Section 905 of the MDOT 2012 Standard Specifications for Construction.

6.02.07.06 Flexible Manhole Connectors (Rubber Boots)

Flexible manhole connectors (also called rubber boots) shall be "Kor-N-Seal" by National Pollution Control Systems, Inc., "P.S.X." or "Press Wedge II" by Press Seal Gasket Corporation, "Lock Joint Flexible Manhole Sleeve" by Inter Pace Corporation, "A-LOK," "Z-LOK," or "QUIK-LOK" by A-LOK Products, Inc. or approved equal. Flexible manhole connectors shall conform to the requirements of ASTM Designation C923, Resilient Connectors Between Reinforced Concrete Manhole Structures, Pipes, and Laterals.

6.02.07.07 Manhole Steps

Unless otherwise specified, manhole steps shall be plastic coated steel steps conforming to the requirements of ASTM Designation C478, or approved equal, spaced at sixteen inches (16") on center.

6.02.07.08 Manholes with Corrosive Conditions

When shown on the drawings, or included in the proposal items, manholes that

are anticipated to have corrosive conditions due to septicity, forcemain connection or other causes shall be provided with corrosion protection on the interior of the manhole.

Corrosion protection may be provided via a polymer concrete manhole, a bond welded PVC cast in place liner, or an epoxy liner as approved by the Engineer.

6.03 INSPECTION OF MATERIALS BY CONTRACTOR

It shall be the responsibility of the Contractor to inspect all materials for cracks, flaws or other defects before they are incorporated into the work. Any materials found to be defective or damaged shall be promptly removed from the job site by the Contractor.

6.04 LAYING PIPE

6.04.01 Alignment and Grade

6.04.01.01 Laser Alignment

The Contractor shall use the laser beam method of maintaining line and grade for sewer construction, unless otherwise approved by the Engineer. The Contractor shall submit evidence to the Engineer that a qualified operator will operate the laser beam equipment during the course of construction.

The Engineer shall place line and grade stakes at each manhole, or more often, as determined by the Engineer. The Contractor shall check the line and grade at every point at which a stake has been placed.

6.04.02 Handling

Pipe shall be protected during unloading and handling against impacts, shocks and free fall. Pipe handled on skidways shall not be skidded or rolled against pipe already on the ground.

6.04.03 Direction of Laying

Excavation of trenches and laying of pipe shall begin at the outlet for the sewer and proceed upgrade with the individual pipe being laid with the spigot end downstream.

6.04.04 Placing

The pipe shall be placed on the prepared sub-grade and held firmly in place during subsequent pipe jointing and embedment operations. Successive pipes shall be carefully positioned so that when laid, they form a sewer with a uniform invert true to line and grade.

Sufficient pressure shall be applied by an approved method to each pipe as it is

laid to ensure that the spigot is completely home in the bell. Care shall be exercised to prevent joints from opening as successive lengths of pipe are placed. The Contractor shall take the necessary precautions when using a trench box to prevent joint separation when the box is pulled ahead.

All plastic/flexible pipe shall be installed in accordance with ASTM D2321. Rigid pipe shall be installed in accordance with ASTM C12 (vitrified clay pipe) and ASTM C1479 (precast concrete pipe), if approved by the Owner.

6.04.05 Cleaning Sewer

The interior of the sewer shall be cleaned of all jointing material, dirt and debris as the work progresses.

In small sewers where cleaning after laying may be difficult, a swab or drag may be required in the pipeline to satisfactorily complete this work. Where possible, a plug shall be installed on the downstream end of the sewer to prevent any sand and debris from entering the existing sewer.

6.05 PIPE JOINTS

Pipe joints shall be made in strict accordance with the pipe manufacturer's recommendations unless otherwise specified herein. All lubricants, gaskets and other materials required to make the joints shall be supplied or recommended by the pipe manufacturer, and approved by the Engineer.

Pipe layers shall be fully qualified and experienced in the work being performed and shall check each joint after it is completed to see that no part of the joint material is left on the inside of the pipe and that the joint is properly made.

6.06 LOCATION OF WYES AND TEES

The approximate locations of wyes or tees are shown on the drawings. These locations may be adjusted where necessary to best serve the various properties. Exact locations shall be determined by the Engineer before the wyes or tees are installed.

The Contractor shall keep an accurate record of measurements from the nearest downstream manhole to each wye or tee which is installed, the length of each lateral, the depth at the end of each lateral and the distance to the down stream manhole parallel to the sewer at the end of each lateral. These measurements shall be recorded on the record plan to be furnished by the Contractor to the Engineer and Owner.

6.07 SANITARY SEWER LATERALS

6.07.01 General

Installation of sanitary sewer laterals shall meet all requirements specified for

sanitary sewers. All laterals shall be inspected by the Engineer before the trench is backfilled.

6.07.02 Length

All sanitary sewer laterals shall be laid at right angles to the sanitary sewer mainline unless otherwise shown on the drawings, and shall extend to a point one foot outside the street right of way (property line) unless otherwise directed. No payment will be made for pipe laid beyond this point unless specifically ordered by the Engineer.

The Contractor shall measure and record on his record drawing the horizontal length of the lateral from the main line sewer to the end of the lateral and provide this information to the Engineer.

6.07.03 Grade

It is intended that the ends of laterals at property lines will be deep enough to service the lowest floor of all existing buildings by gravity flow.

The minimum grade on the lateral shall be 2 percent (1/4 in/ft.). Where minimum depths as specified herein cannot be obtained and when approved by the Engineer, minimum grades may be reduced to 1 percent (1/8 in/ft.).

Where the elevation of the end of the lateral to serve an existing structure is not shown on the drawings it shall be set at 3 feet below basement grade for standard houses (11 feet below first floor) or 4 feet below basement grade for houses with walkout basements (12 feet below first floor) where the set-back is 50 feet or less. When the house is set back further than 50 feet it may be set at 2 feet below the basement elevation for standard houses (3 feet for walkouts) plus an additional depth of 2 percent multiplied by the set-back distance to the structure.

The minimum depth of the end of the lateral at the property line in all cases shall be a minimum 9'-0" below centerline of the street. (See lateral and property line riser detail in these specifications.)

6.07.04 Risers

Where the sanitary sewer is more than twelve feet deep, a main line riser shall be constructed in accordance with the standard details or as shown on the drawings. Backfill shall be carefully placed and compacted around the riser in an approved manner which will not damage the sewer or riser.

Property line risers shall be constructed at the end of the lateral (at a point approximately five (5) feet from the right-of-way line unless otherwise specified).

The property line riser shall consist of a 6" sewer lateral pipe extended upward to a minimum of one (1) foot above the normal groundwater table, or to a depth of not greater than four (4) feet below grade at the end, whichever is the closest to

finished grade. In all cases the lateral shall have a minimum of two (2) feet of cover.

6.07.05 Markers and Measurements

After installation of the service lateral, but prior to backfilling, the Contractor shall provide and install a 2" x 2" wood marker for each service. The wood markers shall be set vertically from the end of the lateral to twelve (12) inches above finish surface elevations. Also, a 1/2" diameter by 3' long metal stake shall be placed vertically and adjacent to the wood marker with 6" cover. The Contractor shall assist the Construction Observer in locating the end of each lateral, and in recording the location by measuring to the nearest downstream manhole.

After the record drawing locations have been recorded and checked by the Construction Observer, the Contractor shall cut off the markers as follows: in improved areas, the markers shall be cut off two inches below grade; in undeveloped areas, the markers shall be cut off six inches above grade.

6.08 MANHOLE CONSTRUCTION

Manholes shall be constructed in accordance with the standard details and as specified herein. Manholes shall be water tight.

Unless specified otherwise, all manholes shall be precast.

Precast bases shall be installed on sand or gravel subbase in such a way as to provide a uniform bearing under the manhole base.

Precast manholes with integral bottom and channel may be used; however, any changes to the structure due to minor field adjustments in alignment and grade required to meet construction conditions, shall be made by the Contractor at no additional cost to the Owner.

Benches shall be constructed from the invert to the crown on the pipe for the entire length of the manhole or junction point.

Stubs shall be provided in manholes for future connections as shown on the drawings or as directed by the Engineer. All such stubs shall be sealed with standard watertight, removable plugs.

All openings in manholes for the purpose of receiving pipes (including openings for future pipes) shall be fitted with a flexible type connector. Flexible connectors shall be factory installed. Openings for future connections shall be sealed by an approved prefabricated cap or plug.

Precast concrete adjusting rings shall be used to bring existing and new manhole structure covers within the proposed pavement to grade. After the cover is

brought to grade, the entire hole created by excavating to raise the casting shall be filled in three-inch (3") lifts with Hot Mix Asphalt Mixture 3C or 13A to the top of the leveling course and air tamped to achieve proper compaction. Special care shall be taken to prevent debris from entering sewers.

6.09 CUT-INS

When cutting into an existing manhole, the opening shall be no larger than is necessary to admit the new sewer. The opening shall be made by a concrete drilling or coring machine and shall have a mechanically compressed flexible joint connection installed. All broken or surplus material falling inside the structure shall be removed.

Flow channels and/or drop connections shall be constructed as specified or as directed to accommodate the sewer being cut-in.

Unless otherwise specified, cut-ins shall be considered part of the major items of work, and no specific payment will be made therefor.

6.10 ACCEPTANCE TESTS

6.10.01 Alignment and Grade

Each section of sewer may be checked by the Engineer for alignment and grade using lights and mirrors, television inspection, or other similar means. The Contractor shall assist the Engineer in the performance of these tests when necessary.

If a section of sewer is determined by the Engineer not to be acceptable for alignment or grade, the Contractor shall relay the sewer at no additional cost to the Owner.

6.10.02 Leakage Tests

The completed sewer shall be free from leaks either by infiltration or exfiltration. Manholes will be visually inspected for leakage. No more than 1,000 feet of main sewer will be considered for partial payment until it has been satisfactorily tested and approved.

The Contractor shall provide all necessary labor, equipment and supervision to perform infiltration, exfiltration and air tests in accordance with the requirements of the Engineer. All sewers shall be subjected to an air test unless otherwise specified below.

All sewers which are submerged by ground water to an average depth of greater than seven (7) feet above the crown of the sewer at the time of the test shall be subjected to an infiltration test.

The air test shall be performed on each section of pipe between manholes after

laterals are installed. Testing shall conform to ASTM F1417 for plastic flexible pipe, ASTM C828 for clay pipe (if approved) and ASTM C924 for reinforced concrete pipe. The section of pipe being tested shall be sealed at each manhole using inflatable plugs or other approved devices. All plugs shall be adequately braced.

Where the expected water table level, as determined by the soil borings, is above the sewer elevation, the pressure testing limits for dry trench conditions shall be as follows:

1. Where the expected water table level is 0' to 7' above the pipe, the test pressure limits will be 3.5 to 2.5 psig.

2. Where the expected water table level is over 7' above the pipe, the test pressure limits will be 4.5 to 3.5 psig.

In a wet trench condition where the water table has risen above the pipe to a depth of less than 7' above the crown of the pipe prior to testing, the air testing limits shall be determined by adding to the original 3.5 psig. an additional 0.433 psig. for each foot the water table is above the crown of the pipe, or as determined in the dry trench condition, whichever is greater.

The air pressure in the section under test shall be raised to an initial pressure of 0.5 psig. above the beginning test pressure and allowed to stabilize for a minimum of five (5) minutes. Air shall be added during this stabilization period as required to maintain the pressure at or above the beginning test pressure.

The rate of air loss shall be determined by measuring the time interval required for the internal pressure to decrease 1.0 psig. within the limits previously specified.

Minimum time interval for satisfactory test shall be in accordance with Table 1 and Table 2 following this section.

In the event the Engineer determines that the results of the air test are inconclusive because of visible infiltration, unsatisfactory or incomplete records, or improper application of testing methods or equipment, or other similar reasons, the Engineer may require either an exfiltration test or an infiltration test for the section or sections of sewer involved.

The allowable leakage as measured by either an infiltration test or an exfiltration test shall not exceed 50 gallons per day per inch of diameter per mile of sewer.

Sewers shall be tested for exfiltration by isolating a section or sections of the sewers between manholes by means of an approved temporary type of water-tight bulkhead. The isolated section of sewer shall then be filled with water to a level which is two and one-half (2-1/2) feet above the existing water-table but not less than two and one-half (2-1/2) feet above the crown of the sewer pipe at the high

end of the isolated section under the test. The length of the section shall be such that, where possible, the water level at its lower end will not be more than five (5) feet above the crown of the pipe except as may be required by a high water table.

The length of time and the exfiltration test period shall be at the discretion of the Engineer. Determination of the amount of exfiltration shall be made by measurement of the loss of volume of water in the manholes. The amount of exfiltration over a 24 hour period will then be calculated from the measured loss of volume and time period.

On any section of sewer that the Engineer shall deem impractical to test by means of the exfiltration test specified above, as may be the case when local connections are involved, a suitable infiltration test will be required.

6.10.03 Pipe Deflection Tests (Flexible Pipe Only)

Flexible pipe is any pipe having a pipe stiffness of 115 psi. or less as defined under the requirements of ASTM Designation D2412. Truss pipe will not require a deflection test if it has less than twelve feet (12') of cover.

The completed installation of flexible pipe shall at no point have out-of-round deflections in the main sewer pipe greater than five percent (5%) of the pipe's actual original inside diameter. Go/no go gauging tests, using an approved pointed mandrel with nine (9) points, shall be performed by the Contractor in the presence of the Engineer, or his authorized representative after the trench is backfilled, and before the surface restoration is begun. Pipe with deflections greater than five percent (5%) shall be relaid by the Contractor at no additional expense to the Owner. Use of mechanical devices or equipment to complete the go/no go tests and vibratory rerounding of failed sections are prohibited. A minimum of thirty (30) days shall elapse between installation and backfilling and deflection testing.

6.10.04 Televising

After the pipe deflection test, placement of base course (when the pipe is proposed under pavement), and pipe cleaning (when the sewer has been live prior to televising), the Contractor shall conduct a continuous digital video recording inspection of all sanitary sewers. The inspection and documentation shall meet the requirements of the National Association of Sewer Service Companies (NASSCO) specification for television inspection of sewers. Closed-circuit television (CCTV) recording shall be conducted in compliance with the North American Pipeline Assessment and Certification Program (PACP) standards for sewer defect identification and assessment. Work shall be performed by a PACP-certified operator and delivered on professional quality recording media with audio input that is compatible with the Engineer’s and Owner’s equipment for viewing. The televising software shall be PACP-certified by NASSCO and shall be capable of both exporting to and importing from the standard PACP database.

If the television inspection of an entire section (manhole to manhole) cannot be successfully performed from one manhole, a reverse setup shall be performed per PACP requirements as a second survey.

The Contractor shall provide a written report, two copies of the recording on DVD, and a digital copy of the exported PACP database. The recording shall show the name of the project, the purpose of inspection, the date and approximate time of recording, the name of the street, the manhole numbers of each end of each run (the "from" and "to" manholes) and stationing between manholes. The recording shall clearly show the pipe interior, joints, alignment, and wye locations and stations, and shall be reviewed by the Engineer for evidence of compliance with the Contract Documents for workmanship and materials. The written report shall contain a log for each recording to provide a written record of the information provided on the recording, and shall show the name of the project and all other pertinent data.

6.11 MEASUREMENT AND PAYMENT

6.11.01 General

All proposed construction shall be measured for payment by the Engineer in accordance with the items listed in the Proposal.

The unit price bid for each Proposal item shall be payment in full for completing the work, ready for use as specified.

6.11.02 Sanitary Sewers

Measurement of the length of the sewer shall be in lineal feet along the centerline of the sewer from center of manhole to center of manhole.

Where depth classifications are provided, the depth of the sewer connecting two adjacent structures shall be considered as being the average of the depth from earth grade to the sewer invert at these structures.

6.11.03 Manholes

Manholes shall be paid for in accordance with the units established in the Proposal. When no Proposal item is provided for castings, the castings and their installation shall be considered part of the major items of work.

When corrosion protection is needed for existing manholes, this shall be paid for separately in accordance with the units established in the Proposal. When called for on the drawings or in the project specifications for corrosion protection in new manholes, this shall be paid for separately in accordance with the units established in the Proposal; if no Proposal item is provided, corrosion protection shall be considered included in the Proposal item for manholes.

6.11.04 Wyes or Tees

When a specific item is provided in the Proposal for Wyes or Tees the unit price bid shall be the additional cost of furnishing and placing the wye or tee over and above the cost of furnishing and laying the sewer pipe.

When no Proposal item is provided, the wyes or tees and their installation shall be considered part of the major items of work.

6.11.05 Sanitary Sewer Laterals

The length of sewer laterals shall be measured horizontally from the center of the main sewer to the end of the lateral as specified.

6.11.06 Cut-Ins

Cut-ins shall be considered part of the major items of work and no specific payment will be made therefor.

6.11.07 Stubs

Stubs shall be considered part of the major items of work and no specific payment will be made therefor.

6.11.08 Risers

The length of main line risers shall be measured vertically from the top of the main sewer to the end of the riser. The length of property line risers shall be measured vertically from the top of the lateral at the lower bend for the riser to the end of the riser. When no Proposal item is provided, the risers and their installation shall be considered part of the major items of work.

TABLE 1 – PVC and DI Pipe

Pipe Diameter, in.	Minimum Time, min:s	Length for Minimum Time, ft	Time for Longer Length, s	Specification Time for Length (L) Shown, min:s							
				100 ft	150 ft	200 ft	250 ft	300 ft	350 ft	400 ft	450 ft
4	3:46	597	0.380 L	3:46	3:46	3:46	3:46	3:46	3:46	3:46	3:46
6	5:40	398	0.854 L	5:40	5:40	5:40	5:40	5:40	5:40	5:42	6:24
8	7:34	298	1.520 L	7:34	7:34	7:34	7:34	7:36	8:52	10:08	11:24
10	9:26	239	2.374 L	9:26	9:26	9:26	9:53	11:52	13:51	15:49	17:48
12	11:20	199	3.418 L	11:20	11:20	11:24	14:15	17:05	19:56	22:47	25:38
15	14:10	159	5.342 L	14:10	14:10	17:48	22:15	26:42	31:09	35:36	40:04
18	17:00	133	7.692 L	17:00	19:13	25:38	32:03	38:27	44:52	51:16	57:41
21	19:50	114	10.470 L	19:50	26:10	34:54	43:37	52:21	61:00	69:48	78:31
24	22:40	99	13.674 L	22:47	34:11	45:34	56:58	68:22	79:46	91:10	102:33
27	25:30	88	17.306 L	28:51	43:16	57:41	72:07	86:32	100:57	115:22	129:48
30	28:20	80	21.366 L	35:37	53:25	71:13	89:02	106:50	124:38	142:26	160:15
33	31:10	72	25.852 L	43:05	64:38	86:10	107:43	129:16	150:43	172:21	193:53
36	34:00	66	30.768 L	51:17	76:55	102:34	128:12	153:50	179:29	205:07	230:46

TABLE 2 – VCP and Concrete Pipe

Pipe Diameter, in.	Minimum Time, min:s	Length for Minimum Time, ft	Time for Longer Length, s	Specification Time for Length (L) Shown, min:s							
				100 ft	150 ft	200 ft	250 ft	300 ft	350 ft	400 ft	450 ft
4	1:53	597	0.190 L	1:53	1:53	1:53	1:53	1:53	1:53	1:53	1:53
6	2:50	398	0.427 L	2:50	2:50	2:50	2:50	2:50	2:50	2:51	3:12
8	3:47	298	0.760 L	3:47	3:47	3:47	3:47	3:48	4:26	5:04	5:42
10	4:43	239	1.187 L	4:43	4:43	4:43	4:57	5:56	6:55	7:54	8:54
12	5:40	199	1.709 L	5:40	5:40	5:42	7:08	8:33	9:58	11:24	12:50
15	7:05	159	2.671 L	7:05	7:05	8:54	11:08	13:21	15:35	17:48	20:02
18	8:30	133	3.846 L	8:30	9:37	12:49	16:01	19:14	22:26	25:38	28:51
21	9:55	114	5.235 L	9:55	13:05	17:27	21:49	26:11	30:32	34:54	39:16
24	11:20	99	6.837 L	11:24	17:57	22:48	28:30	34:11	39:53	45:35	51:17
27	12:45	88	8.653 L	14:25	21:38	28:51	36:04	43:16	50:30	57:42	64:54
30	14:10	80	10.683 L	17:48	26:43	35:37	44:31	53:25	62:19	71:13	80:07
33	15:35	72	12.926 L	21:33	32:19	43:56	53:52	64:38	75:24	86:10	96:57
36	17:00	66	15.384 L	25:39	38:28	51:17	64:06	76:55	89:44	102:34	115:23

Note: Table to be used when testing one diameter only.
When testing two sizes of pipe simultaneously, time shall be computed by the ratio of lengths involved.

$$\text{Time} = \frac{\text{Length 1 x Time1 + Length 2 x Time 2}}{\text{Length 1 + Length 2}}$$

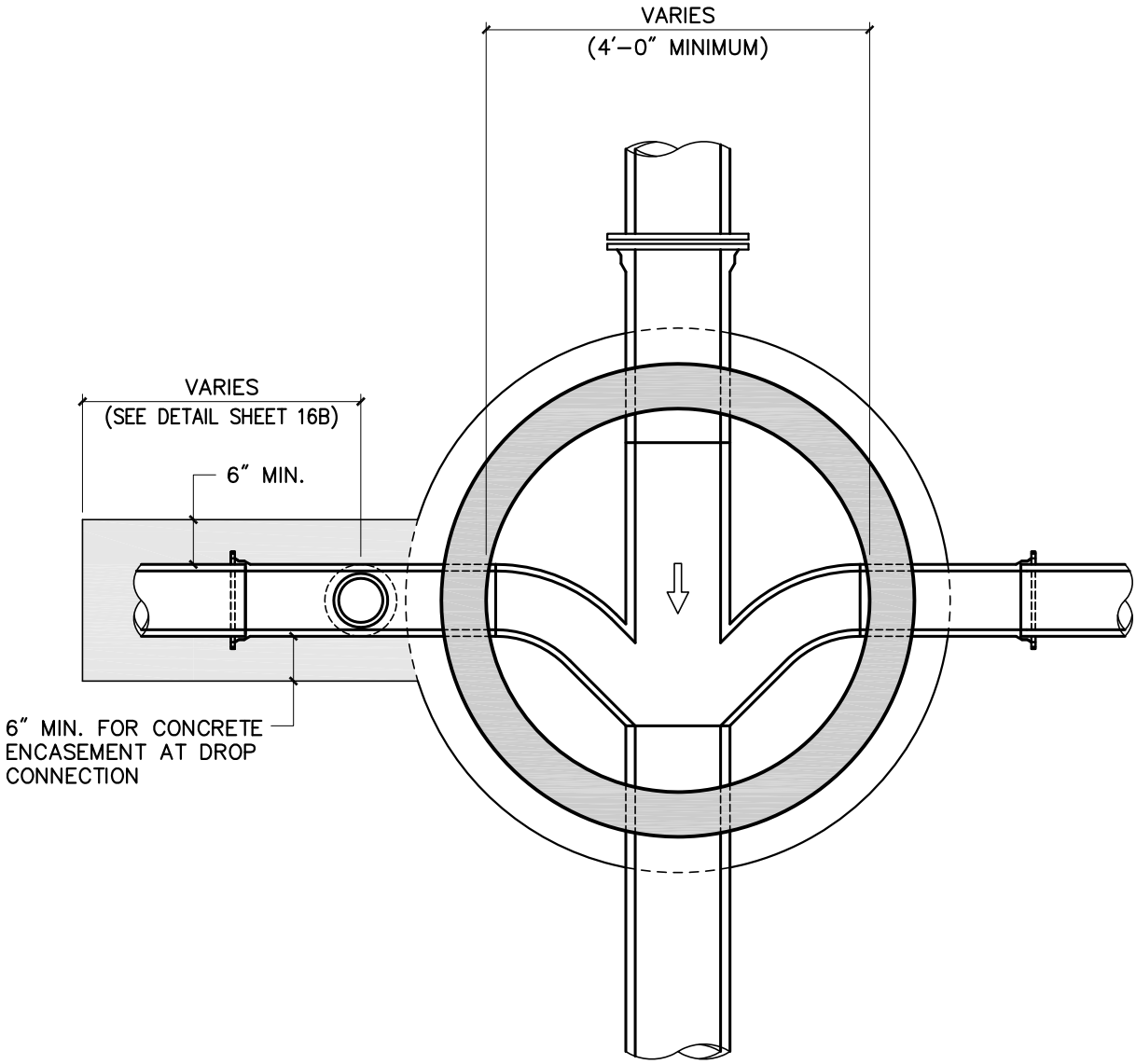

PLAN VIEW

STANDARD SANITARY SEWER MANHOLE

(PRECAST CONCRETE)

NOTES

1. IF BOTTOM IS PRECAST CONCRETE, SET ON MINIMUM 4" SAND SUBBASE (CIP) OR CLASS 1A CRUSHED STONE WRAPPED WITH GEOTEXTILE FABRIC..
2. CONE MAY BE ROTATED TO ALIGN STEPS TO VARIOUS LOCATIONS IN MANHOLE.
3. FLOW CHANNEL WALL HEIGHT SHALL BE EQUAL TO CROWN OF PIPE.

H:_SPECIFICATION DRAWINGS\SECTION 6 - SANITARY SEWER\16_S6_SANITARY_MANHOLE PRECAST.DWG - WDS - Sep, 18 2012 - 08:38am - Prein&Newhof

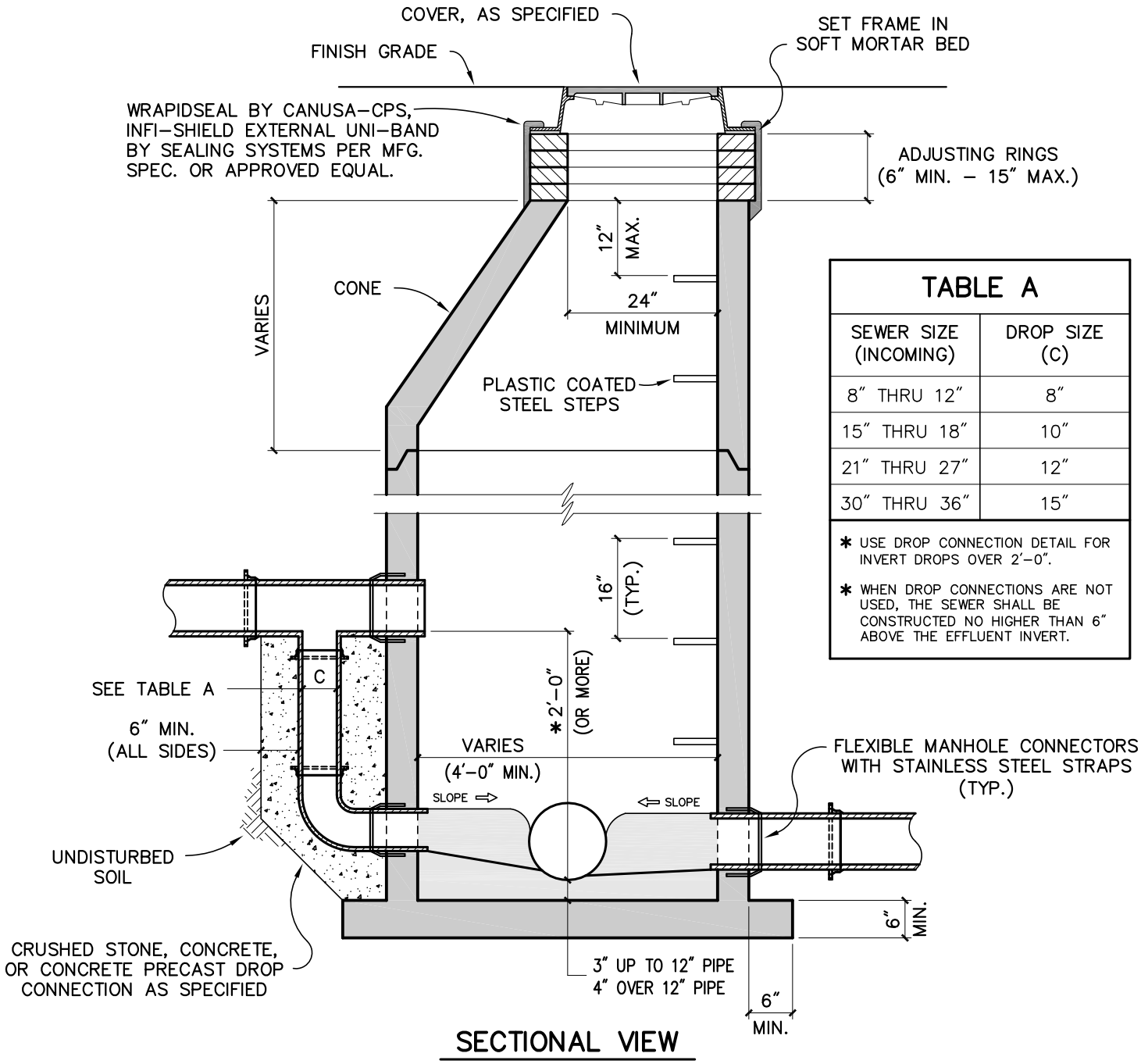

TABLE A	
SEWER SIZE (INCOMING)	DROP SIZE (C)
8″ THRU 12″	8″
15″ THRU 18″	10″
21″ THRU 27″	12″
30″ THRU 36″	15″

* USE DROP CONNECTION DETAIL FOR INVERT DROPS OVER 2′–0″.
* WHEN DROP CONNECTIONS ARE NOT USED, THE SEWER SHALL BE CONSTRUCTED NO HIGHER THAN 6″ ABOVE THE EFFLUENT INVERT.

SECTIONAL VIEW

STANDARD SANITARY SEWER MANHOLE

(PRECAST CONCRETE)

NOTES

1. PRECAST CONCRETE MANHOLE SHALL MEET ASTM C478.
2. IF BOTTOM IS PRECAST CONCRETE, SET ON MINIMUM 4″ SAND SUBBASE (CIP) OR CLASS 1A CRUSHED STONE WRAPPED IN GEOTEXTILE FABRIC.
3. CONE MAY BE ROTATED TO ALIGN STEPS TO VARIOUS LOCATIONS IN MANHOLE.
4. FLOW CHANNEL WALL HEIGHT SHALL BE EQUAL TO CROWN OF PIPE.

Prein&Newhof
09/2012
Section 6 Sanitary

H:_SPECIFICATION DRAWINGS\SECTION 6 - SANITARY SEWER\16_56_SANITARY_MANHOLE PRECAST.DWG - WDS - Sep, 18 2012 - 08:37am - Prein&Newhof

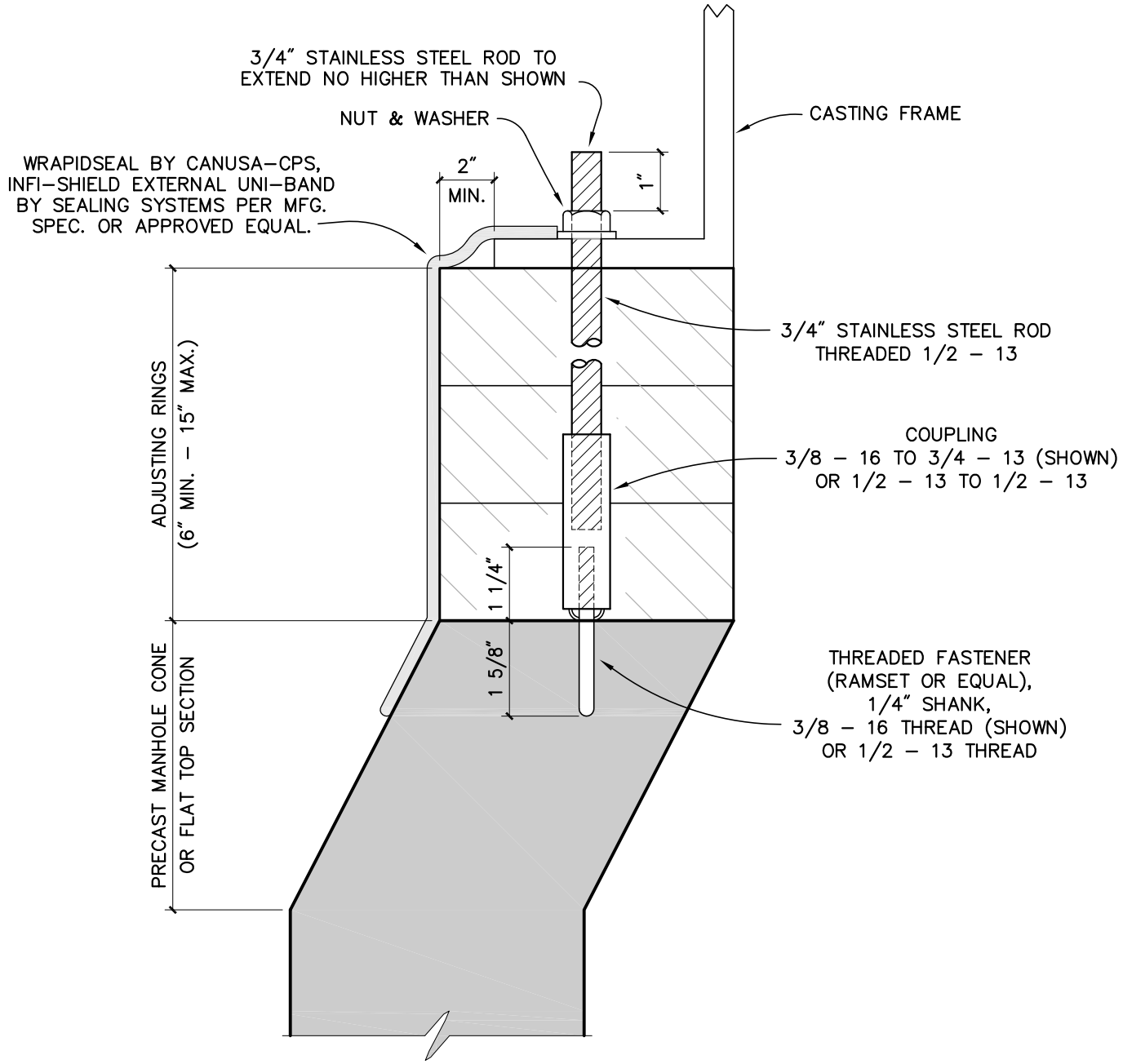

ANCHOR DETAIL

NOTE

FOR ALL PRESSURE TIGHT OR WATERTIGHT COVERS,
FOUR (4) ANCHORS PER COVER

H:\SPECIFICATION DRAWINGS\SECTION 6 - SANITARY SEWER\17_S6_SANITARY_ANCHOR DETAIL.DWG - WDS - Oct, 26 2012 - 03:22pm - Prein&Newhof

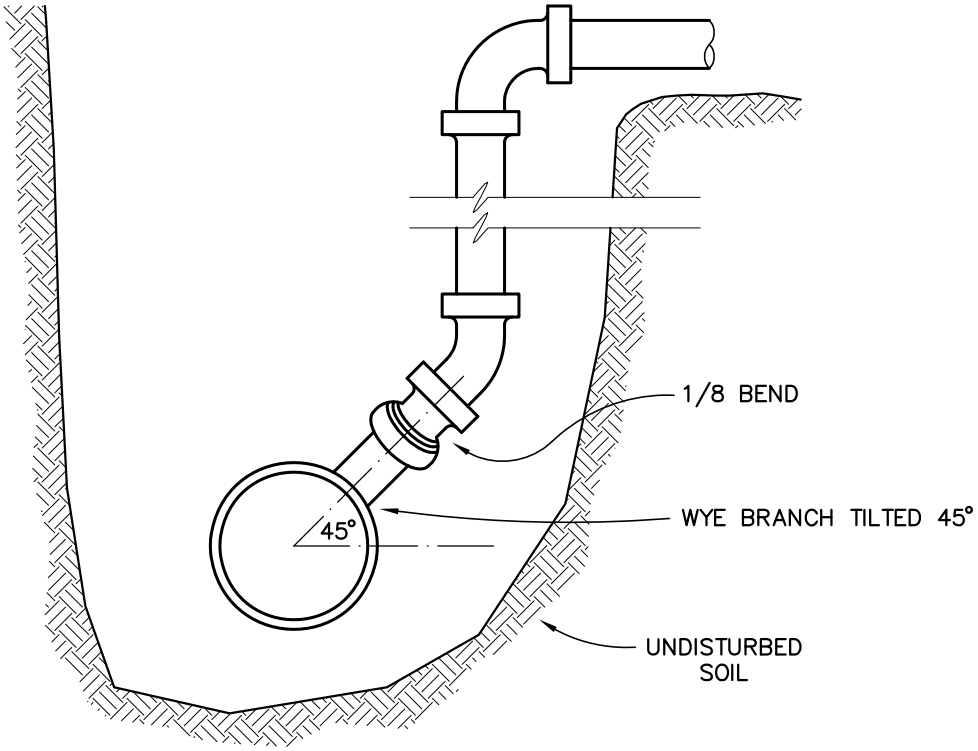

VERTICAL TRENCH

(ONLY WHEN DIRECTED BY ENGINEER)

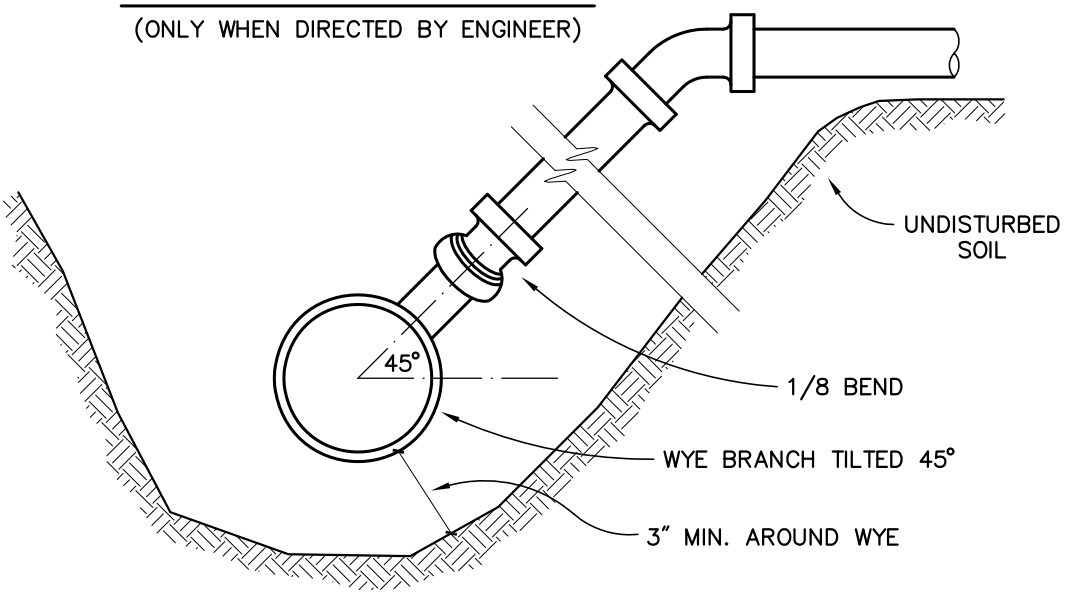

SLOPING TRENCH

(STANDARD)

STANDARD RISER DETAILS

(SEWERS OVER 12 FEET DEEP)

NOTE

SEE PLANS OR SPECS FOR SIZE AND DEPTH OF LATERAL

Prein&Newhof
09/2012
Section 6 Sanitary

H:_SPECIFICATION DRAWINGS\SECTION 6 - SANITARY SEWER\18_S6_SANITARY_STANDARD RISERS.DWG - WDS - Sep, 18 2012 - 08:41am - Prein&Newhof

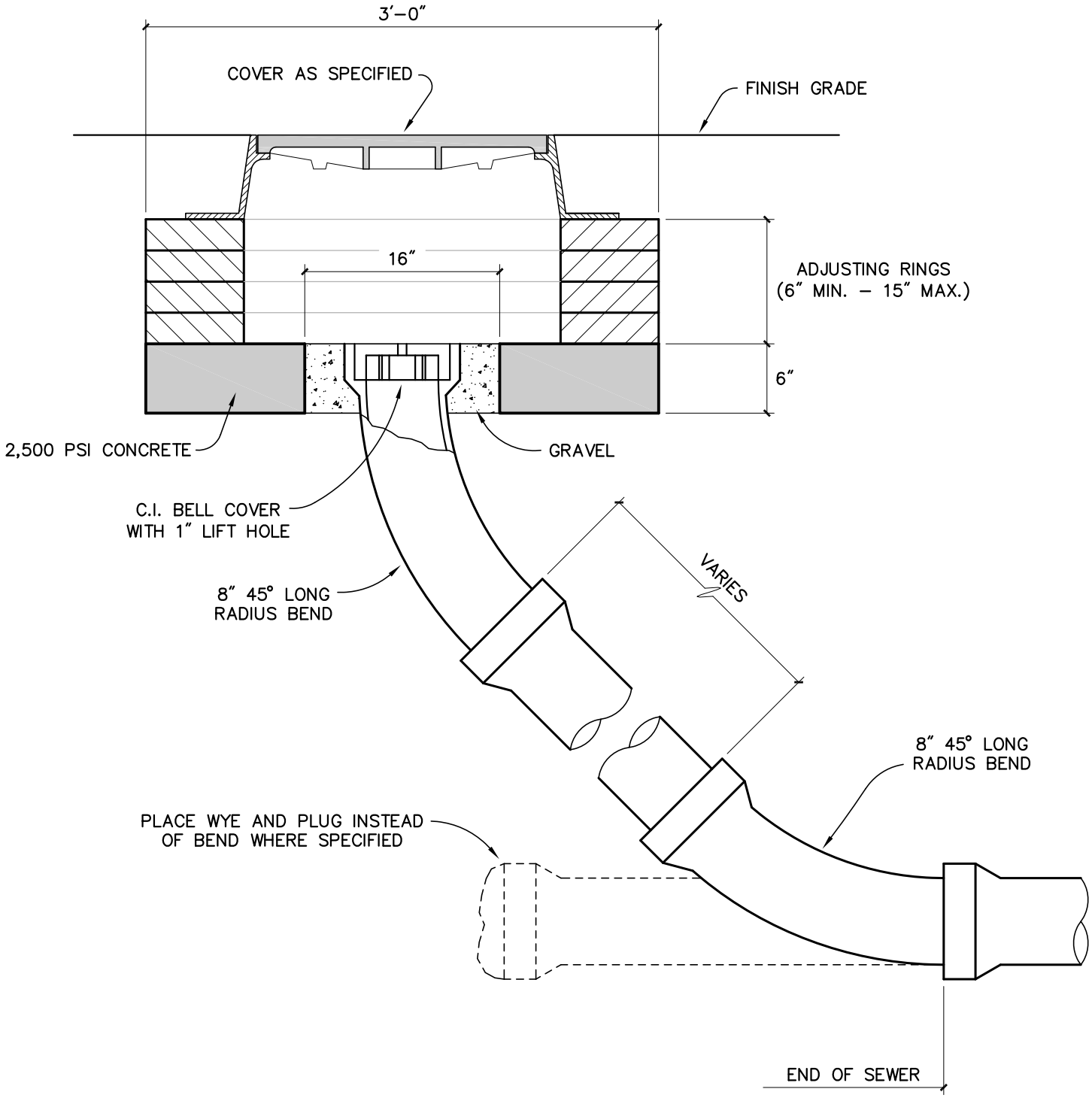

SEWER CLEANOUT

NOTES

1. THE PIPE FOR THE INCLINED EXTENSION FOR CLEANOUT SHALL BE 8" DIA. IF SEWER IS LARGER THAN 8", THEN A REDUCER SHALL BE PLACED BETWEEN END OF SEWER AND LONG RADIUS BEND.
2. JOINTS SHALL BE SAME AS SPECIFIED FOR SEWER CONSTRUCTION.

Prein&Newhof
09/2012
Section 6 Sanitary

H:_SPECIFICATION DRAWINGS\SECTION 6 - SANITARY SEWER\19_S6_SANITARY_SEWER CLEANOUT.DWG - WDS - Sep, 18 2012 - 08:42am - Prein&Newhof

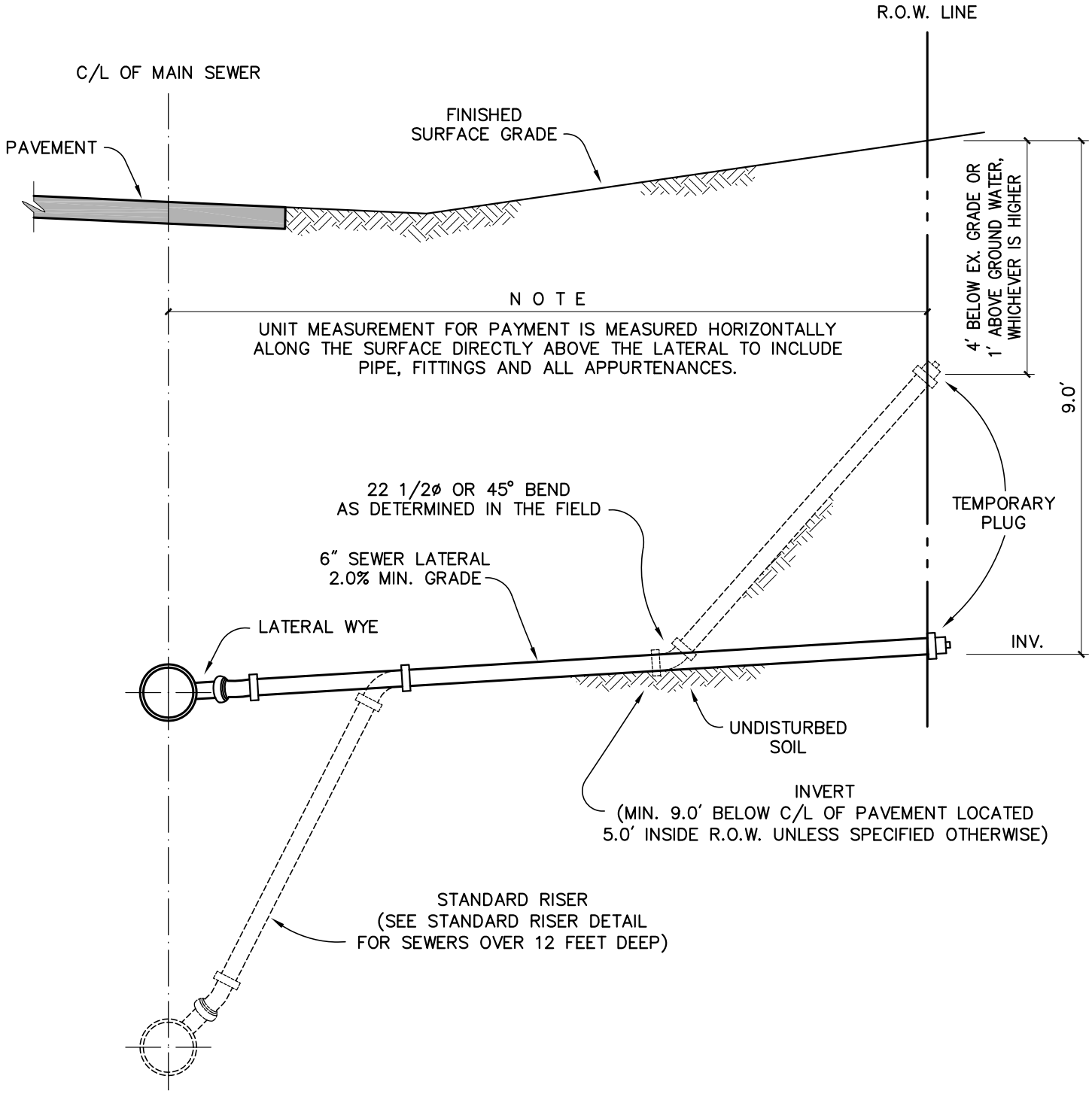

LATERAL AND PROPERTY LINE RISER DETAILS

NOTE

PROPERTY LINE RISER IS REQUIRED WHEN LATERAL IS IN WATER OR WHEN OTHERWISE SPECIFIED.

H:_SPECIFICATION DRAWINGS\SECTION 6 - SANITARY SEWER\20_S6_SANITARY_LATERAL & PROPERTY LINE RISER.DWG - WDS - Sep, 18 2012 - 08:44am - Prein&Newhof

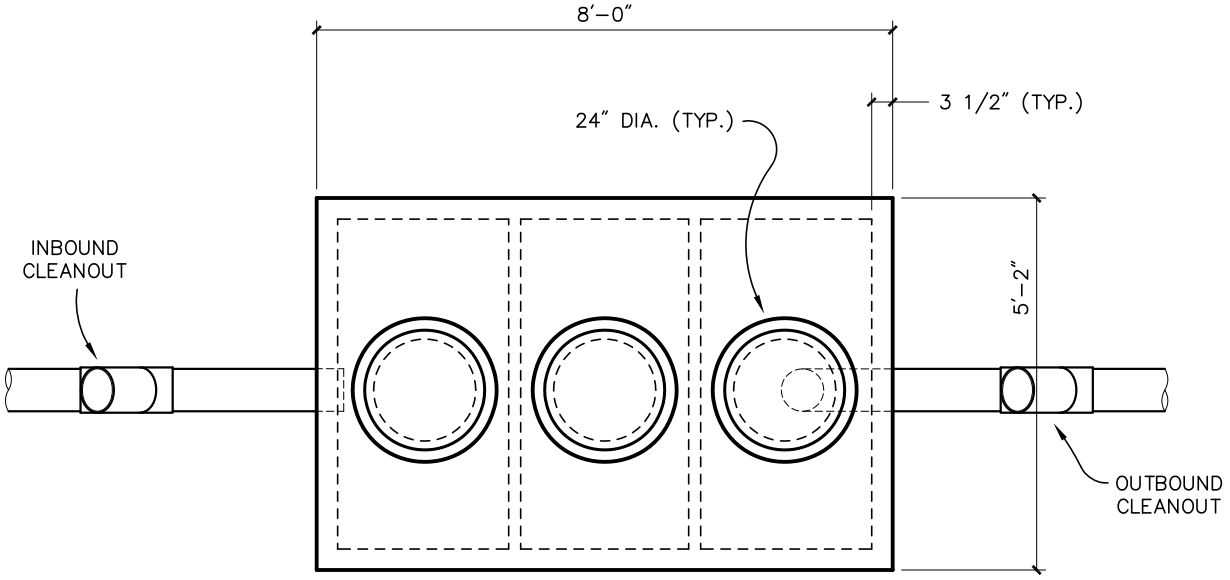

TOP VIEW

NOTE

DROP LEG ASSEMBLY RISER MUST BE BROUGHT UP TO WITHIN 18" OF GRADE ELEVATION

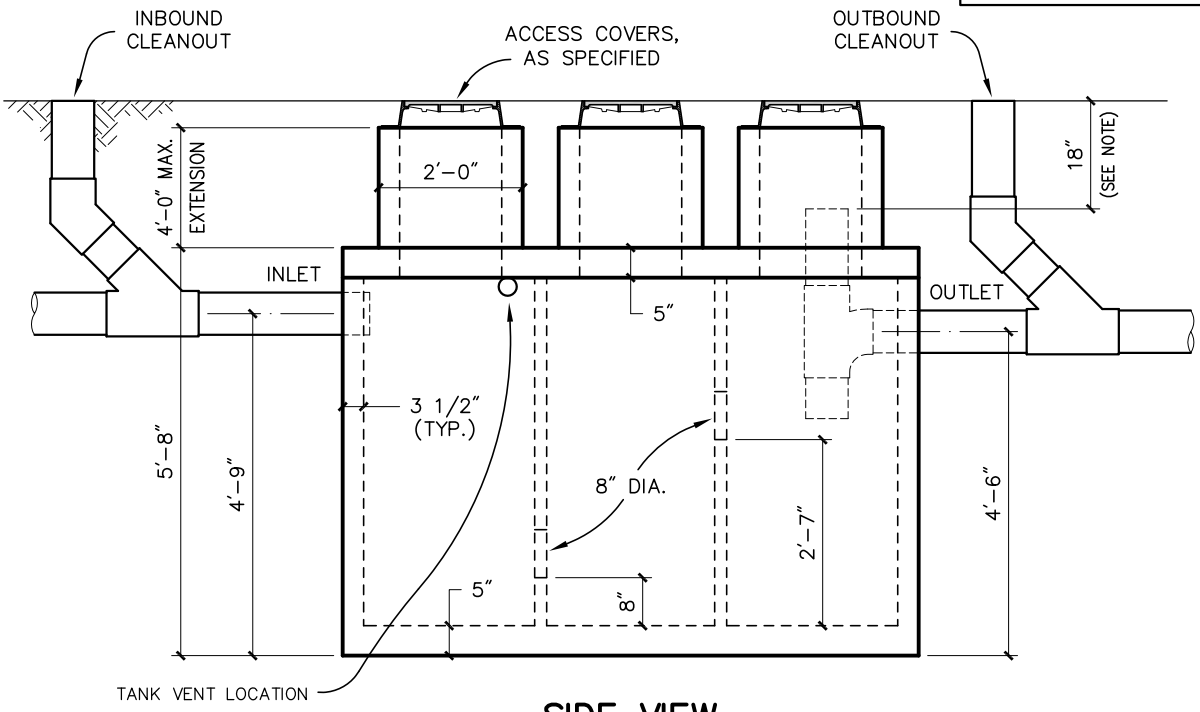

SIDE VIEW

- ACCESS COVERS MUST BE RATED FOR ANTICIPATED TRAFFIC LOAD.
- SEAL BETWEEN TANK AND EXTENSIONS MUST BE WATER TIGHT.
- THE TANK JOINT MUST BE GASKETED AND ENCAPSULATED WITH WRAPIDSEAL OR INFI-SHIELD.
- THE TANK MUST HAVE A VENT ABOVE ALL TANK INVERTS AND MUST BE MADE WATER TIGHT.
- INBOUND AND OUTBOUND PIPES MUST HAVE BOOTED SEAL AT TANK OPENING.
- 18" MINIMUM LENGTH ON OUTBOUND DROPLEG
- A SANITARY TEE MUST BE INCLUDED ON THE DROPLEG ASSEMBLY.

1,000 GALLON OUTDOOR GREASE INTERCEPTER

H:_SPECIFICATION DRAWINGS\SECTION 6 - SANITARY SEWER\21_S6_OUTDOOR GREASE INTERCEPTER.DWG - WDS - Sep, 18 2012 - 08:49am - Prein&Newhof

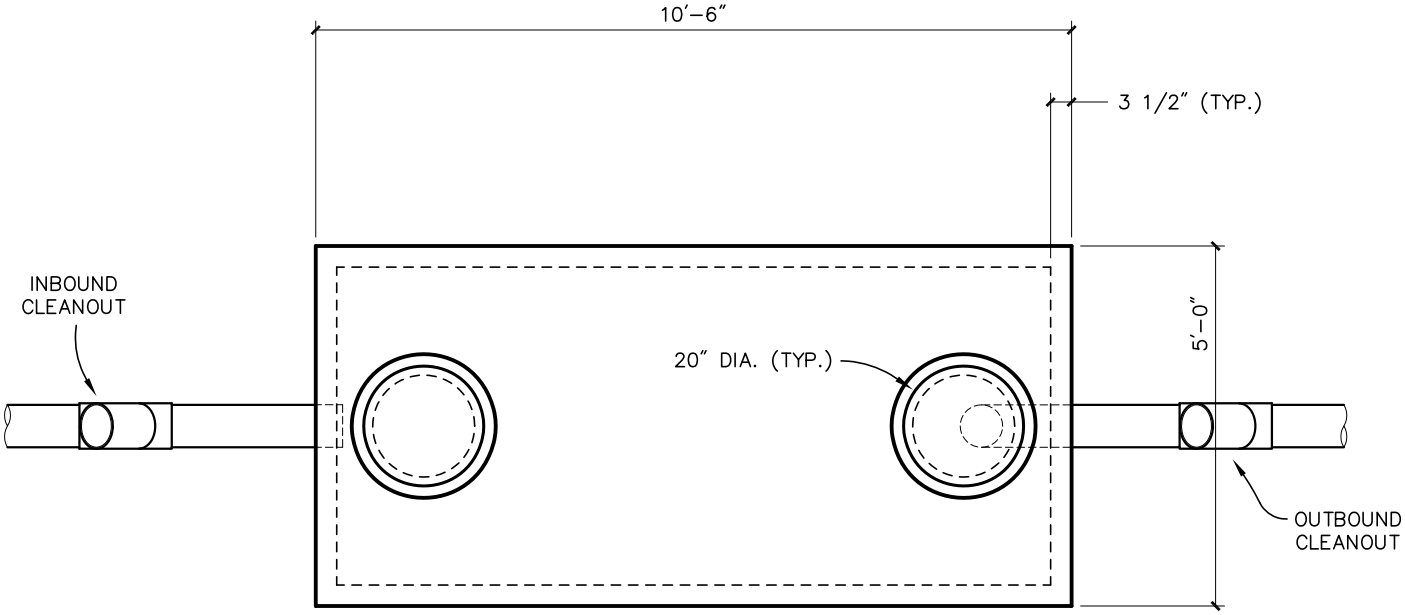

TOP VIEW

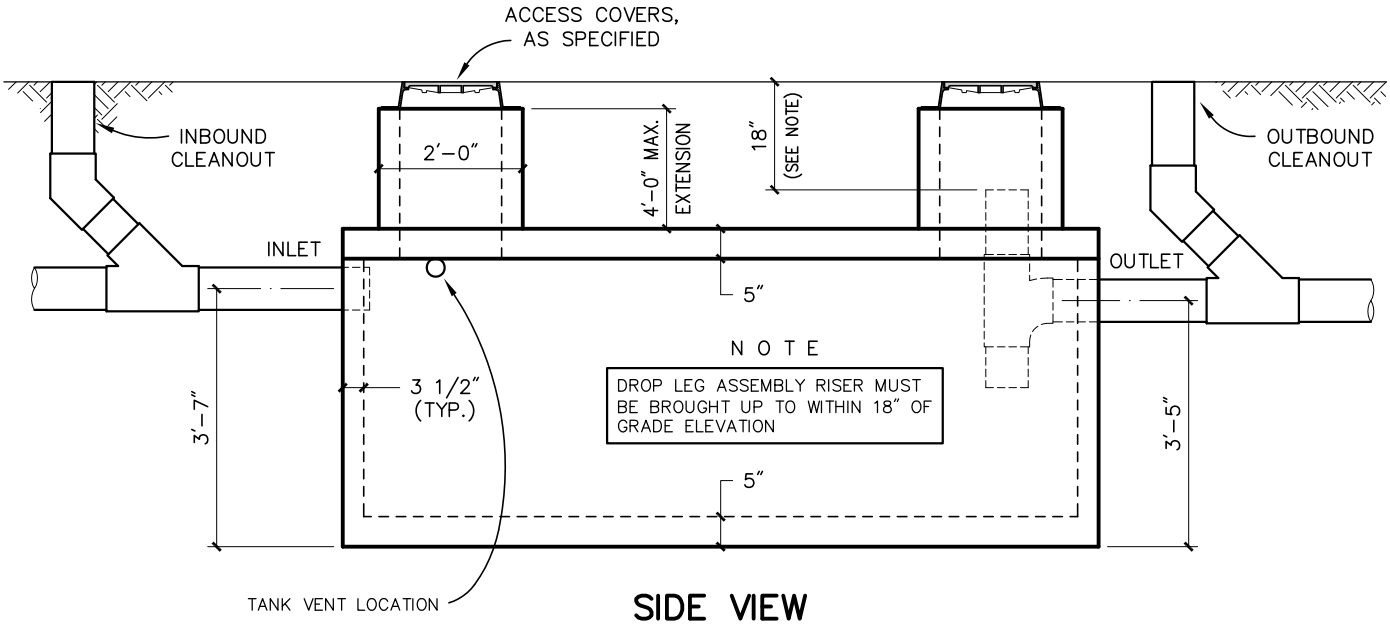

SIDE VIEW

- ACCESS COVERS MUST BE RATED FOR ANTICIPATED TRAFFIC LOAD.
- SEAL BETWEEN TANK AND EXTENSIONS MUST BE WATER TIGHT.
- THE TANK JOINT MUST BE GASKETED AND ENCAPSULATED WITH WRAPIDSEAL OR INFI–SHIELD.
- THE TANK MUST HAVE A VENT ABOVE ALL TANK INVERTS AND MUST BE MADE WATER TIGHT.
- INBOUND AND OUTBOUND PIPES MUST HAVE BOOTED SEAL AT TANK OPENING.
- 18" MINIMUM LENGTH ON OUTBOUND DROPLEG
- A SANITARY TEE MUST BE INCLUDED ON THE DROPLEG ASSEMBLY.

1,000 GALLON OUTDOOR OIL & SAND SEPARATOR

(SHALLOW)

Prein&Newhof
09/2012
Section 6 Sanitary

H:_SPECIFICATION DRAWINGS\SECTION 6 - SANITARY SEWER\22_56_OUTDOOR OIL SEPARATOR.DWG - WDS - Sep. 18 2012 - 08:52am - Prein&Newhof

[Intentionally left blank]

Project Specifications

Owner:	City of Muskegon, Muskegon County, Michigan		
Project Title:	Westwood Sanitary Sewer Replacement, Contract No. 2		
Project #:	2180552	SRF Project No.: 5675-01	SRF Project No.: 7449-01

I. GENERAL

1. STANDARD CONSTRUCTION SPECIFICATIONS

Work under this contract shall be completed in accordance with the General and Supplementary Conditions and the Project Specifications which include the standard specifications contained in these Contract Documents with the following modifications and additions.

Where a standard construction method or contract procedure is not specifically covered by the Contract Documents or shown on the plan, the 2012 Michigan Department of Transportation (MDOT) Standard Specifications for Construction shall apply. Specific references made in these documents will be abbreviated as follows: MDOT 0.0.00

Such current specifications are hereby incorporated into these Contract Documents by specific reference.

2. PROGRESS CLAUSE

The starting date shall be specified in the Detailed Progress Schedule presented to the City at the preconstruction meeting. In no case shall any work be commenced prior to receipt of formal notice of award by the City of Muskegon.

Construction may start no earlier than the Notice to Proceed and substantial completion shall be in accordance with the agreement.

3. SCOPE OF WORK

Work to be constructed in this project includes installing the following approximate quantities:

2,055 feet of 8-inch through 12-inch sanitary sewer installation including replacement of sanitary sewer laterals;

1,300 feet of 12-inch to 15-inch storm sewer installation;

1,625 feet of 8-inch water main installation including replacement of 27 water services from the water main to the meter in the house;

1,630 feet of street reconstruction with curb and gutter, HMA paving, driveway replacement, and minor side walk replacement.

The Contractor shall furnish adequate materials, equipment, labor, and supervision to complete the work. This work also includes testing, inspection, and placing the systems in operation to conform to the standards of the City of Muskegon.

4. PROJECT MANAGEMENT

A. PROJECT SCHEDULE

Contractor shall provide a detailed construction schedule to the Owner and Engineer at or prior to the pre-construction meeting. Contractor shall be responsible for coordination of all work activities.

See Advertisement for additional project schedule information.

B. PROJECT MEETINGS

Project meetings will be scheduled as needed throughout the project. Meetings shall be scheduled by the Engineer and will facilitate the coordination of construction activities and the Contractor's adherence to the project schedule.

C. SHOP DRAWINGS

Contractor shall submit descriptive information regarding the following:

- Sanitary Sewer System
- Water Main System
- Storm Sewer System

Specific submittal content requirements shall be coordinated with the Engineer.

Descriptive information shall consist of drawings, specifications, descriptive data, certificates, samples, test results and such other information necessary to illustrate conformance with the Contract Documents. The Contractor shall be responsible for the accuracy and completeness of the information contained in each submittal and shall ensure that the material, equipment or method of work implemented is as described in the submittal. The Contractor shall initial and sign each submittal, certifying their review of the submittal and its compliance with the Contract Documents.

1. Transmittal Procedure

Submittals shall be submitted electronically via the Prein&Newhof Plan Room. Submittals shall include clear identification of the material, equipment or method of work for which the submittal has been prepared, and any variations from the Contract Documents. A unique number, sequentially arranged, shall be noted on the transmittal form accompanying each item's submittal.

Submittals shall have the following naming format: Submittal Number – Specification Section – Description.pdf (Example: 001-III.3.-Water Main Valves.pdf). Resubmittals shall follow the same general format with a sequential

letter following the submittal number, i.e. A, B, or C being the 1st, 2nd, and 3rd resubmittals, respectively (Example: 001A-III.3.-Water Main Valves.pdf.)

Contractor shall be given a Login ID and Password to the Prein&Newhof Plan room. The website for the Prein&Newhof Plan Room is http://www.preinnewhof.com/plan-room/. Upon logging into the website, Contractor will have access to a project folder labeled with the name of the Owner and Project. This folder will only be accessible to the Contractor, Owner, and Engineer.

Login and password will not be provided to subcontractors. If the Contractor provides their login information to their subcontractors, Contractor assumes responsibility for the subcontractor's actions.

Within the "Project Folder" there will be a "To Be Reviewed" folder and a "Reviewed" Folder. Contractor shall upload submittals in PDF format to the "To Be Reviewed" subfolder. The time and date of the upload will be logged and automatic email notifications will be sent.

Within 15 calendar days, reviewed submittals will be posted in the "Reviewed" folder. Automatic email notifications of the upload will be sent.

The Engineer will update the "Shop Drawing Status Log" and post it in the Project Folder as submittals are received and reviewed, where it will be accessible by the Owner, Contractor, and Engineer.

Submittals which do not have all the information required to be submitted, including deviations, are not acceptable and will be returned without review.

2. Review Procedure

If the review indicates that the material, equipment or work method is in general conformance with the design concept and complies with the Drawings and Specifications, submittal copies will be marked "NO EXCEPTIONS TAKEN". In this event the Contractor may begin to implement the work method or incorporate the material or equipment covered by the submittal.

If the review indicates limited corrections are required, submitted copies will be marked "FURNISH AS CORRECTED". Contractor may begin implementing the work method by the submittal in accordance with the noted corrections.

If the review reveals that the submittal is insufficient or contains incorrect data, submitted copies will be marked "REVISE AND RESUBMIT". If the review indicates that the material, equipment or work method is not in general conformance with the Contract Documents, copies of the submittal will be marked "REJECTED". Submittals with deviations which have not been identified clearly may be rejected.

Except at its own risk, the Contractor shall not undertake work covered by submittals marked "REVISE AND RESUBMIT" or "REJECTED" until it has been revised, resubmitted and returned marked either "NO EXCEPTIONS TAKEN" or "FURNISH AS CORRECTED".

If the review indicates “ACKNOWLEDGED RECEIPT”, the submittal under review has been appropriately noted and filed. No further action is required for a submittal so noted.

3. Effect of Review of Contractor’s Submittal

Review of Drawings, methods of work, or information regarding materials or equipment the Contractor proposes to provide, shall not relieve the Contractor of its responsibility for errors therein and shall not be regarded as an assumption of risks or liabilities by the Engineer or Owner, or by an officer or employee thereof, and the Contractor shall have no claim under the contract on account of the failure, or partial failure, of the method of work, material, or equipment so reviewed.

Review of Drawings also shall not relieve the Contractor of responsibility for the proper fitting and construction of the work nor for the furnishing of materials or work required by the Contract and not indicated on the Drawings.

A mark of "NO EXCEPTIONS TAKEN" or "FURNISH AS CORRECTED" shall mean that the Owner has no objection to the Contractor, upon its own responsibility, using the plan or method of work proposed, or providing the materials or equipment proposed.

5. USE OF PUBLIC RIGHTS-OF-WAY

Work shall be completed within the limits of existing public easements and rights-of-way shown on the plans. The Contractor must coordinate with the homeowners and residents prior to replacing water services and sewer laterals beyond the Right-of-Way and for making connections within the residence. The Contractor shall receive written permission from owners of adjacent properties before using any portion of the property outside the public easement.

6. SOIL EROSION AND SEDIMENTATION CONTROL

In general, the Contractor shall conduct all work in such a manner that soil, fuels, oils, and all other harmful materials are confined within the project limits and prevented from entering storm sewers, ditches, or water courses. In addition, the Contractor shall control discharges from any dewatering systems to prevent erosion, deposition, or harm to the area drainage system and natural resources. After construction is completed, the Contractor shall remove these filters and clean all sediment and debris from the drainage structures.

Contractor shall place silt fence and inlet protection fabric drops as indicated on the plans.

Cost of this work shall not be paid for separately but shall be considered included in major items of construction.

7. CONSTRUCTION PERMITS

The Owner will obtain the Act 399, permit from the Michigan Department of Environmental Quality for the water supply system construction. Copies of the permit will be forwarded to the Contractor once they are received.

The Owner will obtain the Part 41, permit from the Michigan Department of Environmental Quality for the wastewater system construction. Copies of the permit will be forwarded to the Contractor once they are received.

The Owner will obtain a soil erosion control permit from the Muskegon County Department of Public Works. The Contractor shall have a certified storm water operator responsible for monitoring and reporting in accordance with the regulatory agency requirements.

The Contractor shall comply with all permit conditions. Copies of the Owner-obtained permits will be forwarded to the Contractor when they are received. The Contractor shall obtain all permits necessary for construction of this project not obtained by the Owner. The Contractor shall pay for any charges or bonds required by agencies for permits, inspections or similar charges to construct this project as shown on the drawings. The Contractor shall complete all work according to the permits and will be responsible for any fines that may be incurred due to failure to meet any of the conditions of the permits.

8. PROTECTION OF UTILITIES

The Contractor shall furnish, install, use, and maintain adequate sheeting, shoring, bracing, and stabilization methods required to insure the integrity of existing underground utilities both during and after completion of construction. When necessary, the Contractor shall shore and brace existing utility poles and underground utilities that interfere with construction. Methods of shoring and bracing shall be approved by the utility company before excavation in the area begins.

The Contractor shall be responsible for repairing all cracks, leaks, breaks, and defects in the installed utilities during the standard contract guarantee period of one year after acceptance of construction, at no additional cost either to the project owner or the owner of the utility.

Should service provided by public utilities be interrupted by the Contractor, the Contractor shall be responsible for returning all public utilities to normal working order.

Cost for complying with this specification shall be considered incidental to major items of work. Therefore, no additional payment for these items shall be made.

9. HISTORIC OR ARCHEOLOGICAL ARTIFACTS

If historic or archeological artifacts or remains discovered during construction, the Contractor must cease work and notify the Owner and Engineer immediately. No work in the vicinity of the artifacts may commence until state historic preservation office has determined the general limits and potential significance of the site. If human remains are discovered during the construction, the contractor must immediately contact the police department, owner, and engineer.

10. EXISTING UTILITIES

The contractor shall cooperate and coordinate construction activities with the owners of utilities as stated in Section 104.08 of the 2012 MDOT Standard Specifications for Construction. In addition, for the protection of underground utilities, the contractor shall follow the requirements in Section 107.12 of the 2012 MDOT Standard Specifications for Construction. Contractor delay claims, resulting from a utility, will be determined based upon Section 109.05.E of the 2012 MDOT Standard Specifications for Construction.

For protection of underground utilities and in conformance with Public Act 174, the contractor shall dial 811 a minimum of three full working days, excluding Saturdays, Sundays, and holidays prior to beginning each excavation in areas where public utilities have not been previously located. Members will thus be routinely notified. This does not relieve the contractor of the responsibility of notifying utility owners who may not be a part of the MISSDIG alert system.

The owners of existing service facilities that are within grading or structure limits will move them to locations designated by the Engineer or will remove them entirely from the highway Right-of-Way. Owners of Public Utilities will not be required by the City to move additional poles or structures in order to facilitate the operation of construction equipment unless it is determined by the Engineer that such poles or structures constitute a hazard to the public or are extraordinarily dangerous to the contractor's operations.

Locations of existing utilities are shown using available records. Neither the Owner nor the Engineer guarantee that the locations shown on the plans are accurate, nor that additional underground utilities or structures may not be encountered.

11. COMMUNITY RELATIONS AND PROTECTION OF ADJACENT PROPERTY

The Contractor shall be entirely responsible for all damage to water pipes, electric conduits or cables, drains, sewers, gas mains, poles, telephone and telegraph lines, railroad bridges and tracks, streets, pavements, sidewalks, curbs, fences, street and highway bridges and culverts, building foundations, retaining walls or other structures of any kind met with during the progress of the work, and shall be liable for damages to public or private property resulting therefrom.

The Contractor shall shore, brace, install sheeting, and/or then take all precautions necessary to protect against damage to existing structures due to dewatering, excavation, backfilling or other construction at the site. The Contractor shall minimize the amount of excavation and site disturbance and shall save existing structures and landscaping where possible.

12. MOBILIZATION, MAX %

Mobilization shall be per section 150 of the 2012 MDOT Standard Specifications for Construction.

13. REMOVAL OF EXCESS MATERIAL

The Contractor shall remove and dispose of all excess materials resulting from the construction and arrange for disposal at a suitable site.

Costs for complying with this specification shall be included in the major items of construction, and no additional payment to the Contractor will be made.

14. MAIL, PAPER OR DELIVERY SERIVICE AND REFUSE HAULING

The Contractor shall coordinate with the local US Post Office and paper carriers to make sure that their services are not interrupted. If delivery boxes cannot be accessed by delivery personnel during the course of the project they can be temporarily relocated to a central location, which is approved by the US Post Office and shall be reset during restoration. All residents shall be notified as to where the mail boxes will be located prior to relocation.

The Contractor shall coordinate with local garbage and refuse hauling companies serving the streets to be reconstructed so that service can be accommodated during construction.

This work will not be paid for separately, but will be included in major items of work.

15. TRAFFIC CONTROL

The Contractor shall provide all barricades, lights, signs, cones, drums, etc. in accordance with the current edition of the Michigan Manual of Uniform Traffic Control Devices (MMUTCD).

Costs for traffic control shall be included in the lump sum item as listed in the proposal.

Contractor shall provide Type III barricades at all streets entering construction limits. Type III barricades shall have signs reading “Road Closed to Thru Traffic”. Advance warning signs shall be installed prior to the road closure.

Traffic signal operations on all nearby roads will remain and no changes are planned.

All temporary, traffic control signage must be removed from the work site within 3 working days of the restoration of all traffic movements.

16. MAINTAINING TRAFFIC, PUBLIC CONVENIENCE, AND SAFETY

Provide the City of Muskegon with 3 working days’ notice prior to placement of any Traffic Control devices so the City can issue the proper notice of Traffic Control Orders to all stakeholders and interested parties.

Access to fire hydrants, water valves, and gas valves shall be maintained at all times during construction. The Contractor shall also place and maintain temporary aggregate driveways, ramps, etc. which, in the opinion of the Engineer are necessary to accommodate residents and businesses along the construction route.

Emergency vehicles shall have access to the surrounding area at all times and shall be assisted by the Contractor if necessary. Near the end of each day of work, the Contractor shall remove any obstructions which would make access difficult or impossible.

All spillage of materials on public roadways used as haul routes shall be cleaned immediately after the spill occurs.

Costs of complying with this Specification shall be considered incidental to the major items of work. No additional payment shall be made.

17. DUST CONTROL

All haul roads, detour roads and other public and private roads (including backfilled trenches), driveways and parking lots used by the Contractor must be maintained in a dust-free condition during the life of this Contract. The control of dust shall be accomplished by sweeping or the application of dust control materials as often as is necessary to control the dust, or within 4 hours, including weekends, after notification to do so by the Engineer.

Cost of providing dust control shall be included in the major items of work and will not be paid for separately.

Should the contractor be negligent in his duties in providing dust control, the Engineer shall take the necessary steps to perform such work and will charge the contractor for all costs.

18. EXISTING SIGNS

Existing regulatory, warning, and guide signs shall be maintained by the contractor until permanent signing is completed. This includes all labor, materials and equipment necessary to temporarily relocate existing signs. Payment for any necessary temporary relocation shall be included in the “Minor Traf Devices” item. All signs removed shall be returned to the City of Muskegon Department of Public Works.

19. LIMITATIONS ON OPERATIONS

At all times, the Contractor shall conduct the work to cause minimal inconvenience to the public along the work area. Trench backfilling shall be completed, and debris and unsuitable material shall be removed from the site as soon as practicable. Placement of excavated earth along the line of the trench shall always be confined to approved limits.

20. MATERIALS TESTING

The Owner reserves the right to sample and test any of the materials specified for the proposed construction either before or after delivery to the project, and to reject material represented by any sample which fails to comply with the minimum requirements specified.

The Contractor shall furnish manufacturer's certifications for all pipe, manholes and restoration materials used in this project. Certifications shall indicate that the materials meet requirements for the kind and class of material specified. Certifications for other materials used in the project will be provided by the Contractor if so requested by the Owner or Engineer.

The Contractor shall be responsible to inspect all materials for cracks, flaws, and other defects before such material is used in the project. Materials found to be defective or damaged promptly shall be removed from the site.

The minimum frequency of quality control/quality assurance (QA/AC) testing by all parties shall be in accordance with the MDOT 2012 Standard Specification for Construction, the Manual for Michigan Test Methods and the current edition of the MDOT Density Testing Inspection Manual.

21. RECORD DRAWINGS

The Contractor shall keep one record copy of all Specifications, Plans, Addenda, Supplementary Drawings, Working Drawings, Change Orders and Clarification's at the site in good order. Specifications, Plans, Supplementary Drawings and Working Drawings shall be annotated to show all changes made during the construction process. These shall be available to the Engineer and shall be delivered to the Engineer upon completion of the work.

The Contractor shall maintain a set of red-line drawings throughout the project. Red-line drawings are to include, but are not limited to: utility location, manhole inlet and outlet elevations, casting and hatch rim elevations, lengths of utility runs, and manhole cuts. The Contractor shall make the drawings available to the Owner and Engineer in a timely manner upon request. A set of red-line drawings shall be submitted to the Engineer within 30 days of completion of the project.

22. CONSTRUCTION STAKING

Unless otherwise specified, construction stakes will be furnished by the Engineer as described below.

A. STORM SEWER

Centerline of manholes will be staked with a “here” position, an offset and either a line stake or another offset depending on site conditions. Catch basins or manholes that are designed in the curb and gutter or bituminous valley will be staked at the back of curb or back of bituminous valley at the structures with a “here” position, offset and line or second offset stake. If a sewer run is over 75 feet in length, 50 foot check points will be provided.

B. WATER MAIN

Water main will be staked every 100 feet plus special conditions (hydrant tees, valves and change in slope or direction). These stakes will be provided with a minimum offset of 10 feet.

C. SANITARY SEWER

Centerline of manholes will be staked with a “here” position, an offset and either a line stake or another offset depending on site conditions.

D. ROAD STAKING WITH CONCRETE CURB AND GUTTER

In radial sections, stakes will be provided for the radius points and back of curb with flowline elevations at end of returns, high points, low points and/or quarter points. In straight line sections, stakes will be provided for back of curb with flowline elevations every 50 feet along with high and low points.

E. CONSTRUCTION SEQUENCING

The Contractor shall coordinate and schedule their work and the work of their subcontractors to minimize the number of staking requests submitted to the Engineer. Staking requests for this project will be limited to one request per each major utility plus one for curb and gutter. Staking requests should be prepared to incorporate a full day of staking in each survey crew mobilization. Any additional staking requests made by the Contractor will be the Contractor’s responsibility.

The contractor shall give 72 hour notice exclusive of weekends and holidays when requesting stakes. Any additional stakes requested by the contractor, new or replacement of damaged or removed stakes, are the contractor’s responsibility.

The Contractor shall exercise proper care in the preservation of all stakes set for his use or the use of the Engineer and if such stakes are damaged, lost or removed by the contractor’s operation, the cost of resetting will be charged to the contractor.

Any irregularity in grade and/or line stakes discovered by the contractor shall be reported to the Engineer for correction before proceeding with the work.

The contractor shall provide such additional methods, materials, or equipment as may be necessary to facilitate laying out, inspecting and constructing the work. The contractor shall assume full responsibility for all detailed dimensions and elevations measured from the lines, grades and elevations established by the Engineer.

The construction stakes shall be left in place until each phase of the work has been completed and inspected. In the event there are discrepancies in the location or grade of the work, the contractor shall be responsible for making the necessary corrections unless grade stakes that show evidence of an error in staking are left in place.

23. PAYMENT

Payment shall be made for the proposal items only. All of the work specified herein and indicated on the drawings shall be considered to be included in the unit prices shown in the proposal.

II. ROAD RECONSTRUCTION

1. REMOVAL ITEMS

   Removal items shall become the property of the Contractor and shall be completely removed from the site and disposed of properly.

   Driveways, streets, and sidewalks shall be saw-cut at straight, continuous lines relative to the limits of excavation.

2. HMA SURFACE, REM

   HMA surface removal shall be in conformance with Section 501 of the MDOT 2012 Standard Specifications for Construction. Removal shall be to the limits shown on the plans.

   The contract unit price per square yard of HMA Surface, Rem shall include and be payment in full for all labor, material, and equipment required for removal of the existing roadway as proposed.

3. MACHINE GRADING, MODIFIED

   Machine Grading shall be in conformance with Section 205 of the 2012 Standard Specifications for Construction except that it shall include the road subgrade and the road base and additional removal items.

   This work shall consist of all existing pavement removal including HMA and Aggregate driveways, grading, shaping and compacting of the subgrade and base required to construct surface improvements such as pavement, curb and gutter, drive approaches, sidewalks, etc. to the required lines and grades indicated on the plans and cross-section details. It shall also include the removal of all sod, topsoil, shrubbery, excess soils and other unsuitable items that interfere with construction not paid for under separate items.

   Measurement for payment of Machine Grading, Modified shall be in stations along the centerline of the road being disturbed; which shall include all work with in the Right-of-Way on both sides of the roadway, easements adjacent to the Right-of-Way, and to the limits of construction on intersecting streets.

   The contract unit price per station of Machine Grading, Modified shall include and be payment in full for all labor, material, and equipment required for removal of any surface improvement as specified, for topsoil stripping, and for grading necessary to construct surface improvements as proposed.

4. CURB AND GUTTER REM

   An item for concrete curb and gutter removal is included in the proposal. Payment for concrete curb and gutter rem shall be confined to the limits shown on the construction drawings and will be paid per lineal foot along the flow-line of the gutter.

Any additional concrete curb and gutter removal beyond the limits shown on the construction drawings shall be approved by the Engineer prior to removal. Saw cutting required for this item of work shall be included in the Curb and Gutter Rem pay item.

5. SIDEWALK, REM

Removal of concrete sidewalk shall include saw-cutting, removal, and disposal of the existing concrete to provide for restoration of the sidewalk. Payment shall be made per square yard of removal, as given in the proposal.

6. PAVT, REM

Removal of concrete driveways shall include saw-cutting, removal, and disposal of the existing concrete to provide for restoration. Payment for pay item Pavt, Rem shall be made per square yard of removal, as given in the proposal.

7. EXISTING STRUCTURE COVER AND VALVE BOX ADJUST

Adjustment of covers and valve boxes shall be required on existing utility structures to meet the elevation and grade of the proposed street improvements. Adjustments shall be completed in accordance with MDOT 403.03.

New casting and covers will be provided by the Owner at their discretion. In the case where a new cover is substituted, the old cover shall become the property of the Contractor and be disposed of properly.

Precast concrete adjusting rings shall be used to bring existing structure covers within the proposed pavement to grade. Special care shall be taken to prevent debris from entering the sewers.

Payment for "Dr. Structure Cover, Adj, Case 1" and Valve Box, Adj shall be per cover and valve box adjusted as given in the proposal. Payment shall be made for existing structures only.

8. AGGREGATE BASE, INCH, MODIFIED

Construct an aggregate base course on a prepared subbase or subgrade as shown on the plans or as directed by the Engineer. The aggregate base course shall be in accordance with Section 302 and 902 of MDOT 2012 Standard Specifications for Construction, except as specified below:

The material for Aggregate Base shall be MDOT 21AA. The finished grade of the aggregate surface shall be smoothed and shaped to the required line and grade with a tolerance of +/- 3/8" approved by the Engineer prior to placement of bituminous leveling course.

Payment for "Aggregate Base, _ inch, Modified will be in square yards as measured in place, which shall include all labor and equipment needed for furnishing, hauling, placing, spreading, shaping, compacting, and maintaining the new aggregate to conform to the planned cross section.

9. HMA STREET RESTORATION

Street restoration shall be per the details on the plans, aggregate base must be compacted in place to 98% of maximum unit weight. The pavement width shall be as detailed in the cross sections on the project plans. Prior to paving the project limits shall be saw cut to provide a clean butt joint.

The Contractor shall provide mix designs for the project from an approved independent laboratory at least two weeks prior to starting HMA construction. In lieu of a mix design, the Contractor may provide a current (within one year) MDOT mix design for the materials proposed to be used on this project. The mix design shall contain the Marshall density for use in compaction testing. HMA pavement will be paid for by the ton as given in the proposal.

Payment for all HMA items shall be limited to the measured area multiplied by the proposed application rate plus 5 percent. Any overruns will not be paid for by the Owner.

A. CONSTRUCTION METHODS

Construction methods and equipment shall conform to MDOT Standards. If a delay in receiving material occurs, the paver shall not stop, but shall continue forward periodically using material in the hopper. Care shall be taken to avoid irregularities in the surface due to stopping the rollers on the pavement.

B. TESTING

Field tests will consist of extraction tests, compaction testing by nuclear gage and/or coring of the pavement, at the discretion of the Engineer. All testing will be the responsibility of the Engineer. Acceptance of the pavement and price adjustments for defective pavements will be according to MDOT Standard specifications.

10. CURB AND GUTTER, CONC. DET F4

Curb and gutter shall match the curb and gutter cross section shown on the drawings and shall be installed in accordance with MDOT specifications. Concrete grade shall be MDOT 35S. Payment shall be made in linear feet of curb and gutter placed as given in the proposal. Standard curb dub down shall be included in this payment item.

11. DRIVEWAY, NONREINF CONC, 6 INCH

Concrete drives removed during construction shall be replaced with 6” thick nonreinforced concrete installed per MDOT Section 801. Payment shall be by the square yard as given in the proposal.

12. SIDEWALK, CONC, 4 INCH

Sidewalk shall be placed in accordance with MDOT 803 specifications. Concrete shall meet MDOT 35S grade requirements. Expansion joints shall be included longitudinally where concrete sidewalks abut the back of curb, at a maximum of 50 feet on center transverse to the walk and when transvers to the walk when abutting existing sidewalk. Sidewalk abutting the roadway shall be installed with an integral curb. Saw cutting and expansion joints shall be considered included in the cost of sidewalk construction.

Payment for "Sidewalk, Conc, 4 inch" shall be made per square foot of 4" concrete sidewalk placed as given in the proposal.

III. STORM SEWER

1. DRAINAGE STRUCTURES

Construction shall be in accordance with the "Specifications for Storm Sewer" bound within these documents with the following exceptions:

Precast concrete adjusting rings shall be used to bring existing or new drainage or other structure covers within the proposed pavement to grade. Special care shall be taken to prevent debris from entering the sewers.

2. MATERIALS

All drainage structures shall be precast concrete with open bottoms. All drainage structures shall have 2 foot minimum sumps and have an open bottom in accordance with the "Leaching Basin" detail shown in MDOT Standard Plan R-01 Series – Drainage Structures.

All storm sewer pipe shall be CL IV Reinforced concrete pipe and shall have flexible, watertight rubber O-ring gasketed joints conforming to the requirements of MDOT 909.03.

All type B drainage structure covers shall have the City of Muskegon Logo cast into it.

3. MEASUREMENT AND PAYMENT

The completed work as measured for all storm sewer and drainage structures shall be paid for at the contract unit price for the standard contract items. The payment shall be per structure. No additional payment will be made for or additional depth of drainage structures.

IV. RESTORATION

1. TURF RESTORATION

The item "Turf Restoration" shall include furnishing and placing topsoil, seed, fertilizer, and mulch to all areas disturbed by construction within the public Right-of-Way in accordance with Section 816 of the 2012 MDOT Standard Specifications for Construction. All grass areas shall be restored with a minimum of four inches of topsoil (salvaged from grading operations or supplied by the Contractor). The topsoil shall be free of hard clods, stones, and other undesirable materials. The topsoil shall be raked or screened as necessary, to remove any deleterious materials. The acidity range of the topsoil shall be between pH 5.0 and pH 8.0.

Class A Fertilizer at rate of 228 lb./acre and MDOT seed mixture TUF shall be placed over topsoil at a rate of 220 lb./acre which has been prepared and leveled to receive the seed, and wood fiber mulch. Restoration shall be completed by the hydro method. The finished surface shall be smooth and uniform and shall match the existing lawn surface as closely as possible.

The Contractor shall over seed and/or repair and replace the restoration as often as necessary to produce a close stand of grass, at no additional cost to the Owner. Payment for restoration shall be measured by stations along the centerline of the road and will include any necessary restoration on either side of the roadway up to the Right-of-Way and on intersecting streets.

Furthermore, the Contractor shall repair and replace any existing irrigation systems that are disturbed during construction within the Right-of-Way and on intersecting streets.

2. WATER SERVICE RESTORATION, PRIVATE

The item "Water Service Restoration, Private" shall include furnishing and placing topsoil, seed, fertilizer and mulch to all disturbed lawn areas beyond the Right-of-Way which were disturbed during water service installation. Furthermore it shall also include removal and replacement of all landscaping disturbed during installation of water services including mulch, flowers, shrubs, hardscaping such as walls or edging etc. The restoration shall also include repair and replacement of existing irrigation systems which are disturbed during installation. Replacement shall be with an equal replacement in accordance with the Standard Specifications for Restoration. If the residence requests the Contractor to not replace elements of the landscaping the Contractor must receive such requests in writing with the homeowners signature. Copy of the request shall be provided to the Engineer.

Payment of Water Service Restoration, Private shall be the unit price in the proposal and shall be per water service. The price shall include all labor and materials to meet this specification.

3. SANITARY LATERAL RESTORATION, PRIVATE

The item "Sanitary Lateral Restoration, Private" shall include furnishing and placing topsoil, seed, fertilizer and mulch to all disturbed lawn areas beyond the Right-of-Way which were disturbed during sanitary lateral installation. Furthermore it shall also include removal and replacement of all landscaping disturbed during installation of sanitary laterals including mulch, flowers, shrubs, hardscaping such as walls or edging etc. The restoration shall also include repair and replacement of existing irrigation systems which are disturbed during installation. Replacement shall be with an equal replacement in accordance with the Standard Specifications for Restoration. If the residence requests the Contractor to not replace elements of the landscaping the Contractor must receive such requests in writing with the homeowners signature. Copy of the request shall be provided to the Engineer.

Payment of Sanitary Lateral Restoration, Private shall be the unit price in the proposal and shall be per sanitary lateral. The price shall include all labor and materials to meet this specification.

V. SANITARY SEWER

1. GENERAL

Construction shall be in accordance with the "Specifications for Sanitary Sewer" bound within these documents with the following exceptions:

2. SANITARY SEWER

Sanitary sewer shall be installed in accordance with ASTM D2321 and MDOT standard plan R-83-B, Trench Detail B.

Sanitary Sewer pipe shall be SDR 26 polyvinyl chloride (PVC).

Connection to existing sanitary sewers shall be made with Strong Back Ferncos or engineer approved equal.

3. SANITARY LATERAL, __ INCH, PUBLIC

Sanitary laterals from the sanitary main to the property line shall be SDR-26 PVC in accordance with the "Specifications for Sanitary Sewer" and conform to the requirements of ASTM Designation D3034. The depth of the lateral at the property line shall be set by the connection point at the residence for all laterals that are called out to be installed outside of the Right-of-Way.

Connection to existing sanitary laterals at the property line shall be made with Ferncos or engineer approved equal.

Payment for "Sanitary Lateral __ inch, Public" shall be made per foot of sanitary sewer lateral installed within the Right-of-Way as given in the proposal.

4. SANITARY LATERAL, __ INCH, PRIVATE

Sanitary laterals beyond the extents of the Right-of-Way shall be installed using the horizontal directional drilling method (HDD) whenever possible. Sanitary lateral pipe material for laterals installed with the HDD method shall be fusible PVC, or restrained bell and spigot TerraBrute CR pipe, or engineer approved equal.

Prior to installation, the contractor shall field verify the connection location and depth in the presence of the Engineer. Final alignment shall be set once the location of the connection is determined. Final alignment will be based on the least impact to the private property.

Properties called out in the drawings to have internal plumbing rerouted will be completed by others. The private side of the lateral must be stubbed to within 5 feet of the exterior wall and capped. The location of the connection to the building shall be determined by the Owner and the Engineer.

Connection to existing sanitary laterals in private property shall be made with Ferncos or engineer approved equal.

Payment for "Sanitary Lateral __ inch, Private" shall be made per foot of sanitary sewer lateral installed outside of the Right-of-Way as given in the proposal.

5. SANITARY MANHOLES

Precast concrete units with integral base and precast adjustment rings shall be used. The maximum (15") and minimum (6") adjustment standards strictly shall be adhered to. Castings shall be cast iron and conform to East Jordan no. 1045 or approved equal; the Manhole Cover shall have the City of Muskegon Logo cast into it. External casting and adjusting ring seals will be required as specified in the Standard Sanitary Sewer

Drop manholes shall be constructed with precast concrete external drops as detailed in the "Specifications for Sanitary Sewer".

6. BYPASS PIPING

Because sewer service is of an essential nature, bypass pumping of the sewer will be required both during construction and during deflection testing. Disruption of the main sewer or laterals shall only be allowed between 8 am and 4 pm on weekdays during which time the Contractor shall provide bypass pumping to maintain service. At the end of each work day, the Contractor shall reconnect the sewer or provide bypass pumping to maintain full service. Advance notice of 24 hours is required for any disruption.

The Contractor shall submit to the Owner and Engineer for review a Bypass Pumping Operation Plan. The plan should at a minimum include the normal bypass operation, 24 hour contact personnel, a listing of equipment to be used, including backup equipment, and a drawing or sketch of the operation. All changes to the plan must be reviewed by the Owner and Engineer. No loss of wastewater into the environment will be permitted. The Contractor shall be responsible for any fines or damage as a result of failure of the bypass operation and shall indemnify the Owner and Engineer from on any liability form claims resulting from

failure of the bypass operation. Bypass pumping shall be included in the major items of work and no additional payment shall be made.

7. ACCEPTANCE TESTS

Contractor will be required to complete acceptance tests as required in Section 6: Specifications for Sanitary Sewer including Closed-Circuit Television (CCTV) and mandrel testing after installation of all sanitary gravity sewers.

8. PAYMENT

The contract unit price for sanitary sewer shall be payment in full for any dewatering necessary for construction, furnishing and placing the new pipe, bedding material around the pipe as shown on the standard drawings "Class B" pipe embedment, compacted sand backfill that is required the full depth of the trench, bypass pumping as well as flushing and acceptance tests.

VI. WATER MAIN

1. GENERAL

All Water Main construction shall conform to the attached City of Muskegon Standard Specifications for Water Main Construction except if modified below.

All service interruptions shall be coordinated with the City of Muskegon 48 hours prior to interruption. Service interruptions shall last no longer than 6 hours unless approved by the City.

2. CONSTRUCTION METHODS

The existing soils in the bottom of the installation trench shall be compacted to 95% of maximum density prior to placing the pipe.

Unsuitable, unstable, highly compressible or organic materials found in the trench bottom must be removed and replaced.

Solid sleeves shall be used for connection to existing water mains. The Contractor shall determine for himself the requirements for the sleeves. No additional payment will be made for special sleeves to fit the existing pipe unless noted on the plans.

3. MATERIALS

Serrated Silicon Bronze Wedges will not be approved for use to obtain continuity. Continuity shall be obtained using continuity gaskets or straps.

4. RESILIENT SEATED VALVES

All resilient seated valves shall conform to AWWA C509 or AWWA C515, Standards for Resilient-Seated Gate Valves for Water Supply Service. The valves shall be fully bronze mounted and shall be furnished with O-ring packing. The direction of the opening shall be to the Owner's standard.

Valves shall be East Jordan Iron Works, Clow Corporation R/W Resilient Wedge, Waterous Resilient Wedge, U.S. Pipe Metroseal 250 or equal.

5. TEMPORARY SERVICE

Temporary water service may be required to maintain service during water main installation. If the alignment of the proposed water main is in conflict with the existing water main the existing water main must be removed. The Contractor shall provide temporary service connections for those residences affected by a loss of water lasting longer than 12 hours. Temporary service shall be supplied from existing hydrants or stand pipes on the existing water main. Hydrants and stand pipes on the proposed main may be used following acceptance of the water main. The temporary service must be connected to the house via the existing water service and not through a hose bib. Temporary service piping shall be new material, NSF approved for use on potable water, shall be disinfected prior to use, and tested in accordance with AWWA C651. The Contractor shall submit a Temporary Service Plan to the Owner and Engineer prior to implementation. Care shall be taken to protect temporary service lines from damage while in use.

6. WATER SERVICES

A. DESCRIPTION:

All water service construction on this project shall conform to the requirements of Sections 401 and 823 of the MDOT 2012 Standard Specifications for Construction. In addition and included in the price of the new water service will be the abandonment of the existing water service by turning off and disconnecting the existing water service from the existing water main and removing any existing curb boxes or water meter pits.

B. MATERIALS:

All materials shall conform to the City Standards. See also "CITY OF MUSKEGON SPECIFICATIONS FOR WATER MAIN".

C. CORPORATION

The 1 inch corporation shall be a Mueller #15000 (service connection flared) or Mueller #H15008 (conductive compression connection) or approved equal. The corporation shall be included in the pay item for water service.

D. CURB STOP AND BOX

The 1 inch curb stop shall be a Mueller #15157 or #15150 or approved equal with a 2 inch Minneapolis threaded top, bushed for 1.5 inch thread. The box shall be a Mueller #H10302 or approved equal, for 2 inch Minneapolis thread, bushed for 1.5 inch, complete with top.

E. METER PIT

New meter pit shall be a minimum of fifteen inches (15”) inside diameter for 5/8” meters and eighteen inches (18”) inside diameter for ¾” or 1” meters. Meter pit shall be set so the water line has 5.5’ of soil or cover over the water service. Meter pit shall be a Mueller or Ford Meter Box or approved equal. Shop drawings of the type of meter pit must be submitted and approved by the Engineer prior to installation. The meter pit cover shall be a locking style cover and be able to receive the meter interface unit. A minimum of six inches (6”) of insulation shall be installed on an insulation pad above the meter.

F. WATER SERVICE PIPING

Between water main and curb box/meter pit: Water Service shall be constructed of Type "K" copper according to ASTM B88-55.

Between curb box/meter pit and inside of building: Water Service may be Type “K” copper or Crosslinked Polyethylene (PEX) Tubing according to ANSI/AWWA C904 between the curb box or meter pit and the home. PEX tubing shall not be used in any location where there may be petroleum or chemical contamination in soil.

If PEX is used, tracer wire shall also be installed. PEX tubing shall be placed with sufficient slack (snaking) to accommodate contraction prior to backfill. When PEX is run through foundation of basement wall, it must be protected by a rigid sleeve that spans the distance from within the wall out to the undisturbed soil in the pipe trench. The purpose of this protective sleeve is to prevent shearing of the PEX tubing at the wall in the event of settlement in the backfill around the wall. At the point where the sleeve terminates inside the foundation or wall, the space between the PEX tubing and the sleeve should be sealed to prevent leakage into the building. In no case should petroleum based caulk or sealant be used.

G. WATER SERVICE SPECIFICATION REFERENCE (LATEST REVISION OF EACH)

Copper Pipe, ASTM Spec 888-55 "Type K" and AWWA C800

Replacement and Flushing of Lead Service Lines, AWWA C810

PEX Pressure Tubing, ½-inch through 3-inch, for Water Service, ANSI/AWWA C904

H. CONSTRUCTION

Construct and complete this work according to applicable sections of the Standard Specifications for Construction and City Standards. Abandon the existing service by turning off the existing corporation, disconnecting the existing water service from the existing water main and removing any existing curb boxes or water meter pits.

Water services shall be replaced into the customer building up to a point that is 18" inside the wall or at the first valve inside the wall, whichever comes first. Contractor shall coordinate schedule of replacement with the customer with assistance from the Engineer and the City.

Work limits shall include work in public Right-of-Ways and private property, including entering homes and businesses. Privacy of the customer is of utmost importance. Contractors shall take care when entering private property and only with the permission of the property owner. If issues arise where the property owner does not allow entrance, special access may be required with the assistance of the Owner.

Installation of water services on the private side shall be completed using the pipe bursting, moling, or horizontal directional drilling (HDD) methods whenever possible.

I. DAMAGED EXISTING SERVICES

Water services, not scheduled for replacement, which have been cut or broken during construction, shall be repaired using type K copper. When dresser couplings are installed, the contractor shall attach a continuity wire, AGW size #4 copper to both sides of the dresser, properly secured with an approved grounding clamp. The circuit shall then be tested for continuity.

No payment shall be allowed for services cut or broken during construction, except when grade collisions are encountered. In these cases, the Contractor will reroute the service, as instructed by the Engineer, on a lump sum basis agreed to at the time.

J. METHOD OF PAYMENT

The completed work as measured for water services will be paid for at the contract unit prices for the following contract pay items, which include all material, equipment and labor to complete these items:

Pay Item	**Unit**
Water Service, __ inch	Foot
Water Service, Curb Stop and Box, __ inch	Each
Water Service, Corporation Stop, __ inch	Each
Water Service, Meter Pit	Each

Payment for abandonment of the existing service being replaced will be included in the payment for the new water service.

7. WATER MAIN ABANDONMENT

Water main shall be abandoned as shown on the plans. All cut ends of water main shall be bulk headed. Abandonment of existing water services at existing water mains to remain in service shall be included in the major items of work. Removal and disposal of abandoned water main to complete proposed storm and water improvements shall be included in the major items of work and no additional payment will be made. Existing water services shall be crimped, capped or shut at the corporation stop. Plugs or caps installed to maintain service during construction shall be included in the major items of work and no additional payment will be made.

8. ACCEPTANCE

Payment for all testing and disinfecting required in the City of Muskegon Standard Specifications for Water Main Construction shall be considered incidental to the price for water main installation given in the proposal.

The Contractor shall maintain a set of red-line drawings throughout the project. Items to be recorded on the red-line drawings include, but are not limited to: fitting and pipe locations and elevations. A complete set of red-line drawings shall be submitted to the Engineer prior to final payment for the project.

9. MEASUREMENT AND PAYMENT

The completed work as measured for water main will be paid for at the contract unit prices indicated on the proposal, which include all material, equipment and labor to complete these items. All required pipe embedment material shall be included in the cost of the water main pipe. Connection to the existing water mains shall be included in the major items of work and no additional payment will be made.

VII. ALTERNATE NO. 1

1. SANITARY LATERAL, __ INCH, PRIVATE

The Owner may elect to reroute the internal plumbing for the sanitary sewer for the following addresses: 2321 Wickham, 2330 Westwood, 2342 Westwood, 2372 Westwood, and 2416 Westwood. Reworking of the internal plumbing will be completed by others following completion of this Contract, plumbing will be rerouted to exit the front of the house. The Owner reserves the right to make the determination during construction to reroute the internal plumbing for any house on the east side of Westwood Street, instead of extending a lateral to the side yard or backyard.

For any properties that are chosen to reroute the internal plumbing, a sewer lateral shall be extended up to within five feet of the exterior wall at a location determined by the Owner. The lateral shall be capped and marked in accordance with the standard specifications for sanitary sewer. Invert elevation at the house shall be determined by the Owner and Engineer. Contractor must verify elevation of the lateral at the existing exit location to assist in this determination. Final connection to the house will be completed by others.

Contractor shall submit an alternate price for "Sanitary Lateral, __ inch Private" for houses to be rerouted. This price will be used only for houses that are chosen to be rerouted. Price shall include all materials, labor, cap, and exploratory digging required to meet this specification and to install the proposed lateral. The quantity of 1 foot shown in the proposal is listed only to develop a unit price for the proposed alternate work.

2. SANITARY LATERAL RESTORATION, PRIVATE

The Owner may elect to reroute the internal plumbing for the sanitary sewer for the following addresses: 2321 Wickham, 2330 Westwood, 2342 Westwood, 2372 Westwood, and 2416 Westwood. Reworking of the internal plumbing will be completed by others following completion of this Contract, plumbing will be rerouted to exit the front of the house. The Owner reserves the right to make the determination during construction to reroute the internal plumbing for any house on the east side of Westwood Street, instead of extending a lateral to the side yard or backyard.

For any properties that are chosen to reroute the internal plumbing to the front of the house, the alternate item "Sanitary Lateral Restoration, Private" shall include furnishing and placing topsoil, seed, fertilizer and mulch to all disturbed lawn areas beyond the Right-of-Way which were disturbed during sanitary lateral installation. Furthermore it shall also include removal and replacement of all landscaping disturbed during installation of sanitary laterals including mulch, flowers, shrubs, hardscaping such as walls or edging etc. The restoration shall also include repair and replacement of existing irrigation systems which are disturbed during installation. Replacement shall be with an equal replacement in accordance with the Standard Specifications for Restoration. If the residence requests the Contractor to not replace elements of the landscaping the Contractor must receive such requests in writing with the homeowners signature. Copy of the request shall be provided to the Engineer.

Contractor shall submit an alternate price for "Sanitary Lateral Restoration, Private" for houses to be rerouted. Payment shall be the unit price in the proposal and shall be per sanitary lateral. This price will be used only for houses that are chosen to be rerouted. Price shall include all materials and labor required to meet this specification and to restore the areas disturbed by sanitary lateral installation. The quantity of 1 (each) shown in the proposal is listed only to develop a unit price for the proposed alternate work.

END OF SECTION

[Intentionally left blank]

Appendix A

SRF and DWRF Standard Contract Language

[Intentionally left blank]

REQUIRED STANDARD CONTRACT LANGUAGE: CLEAN WATER STATE REVOLVING FUND AND DRINKING WATER REVOLVING FUND

- **Davis-Bacon/Prevailing Federal Wages, Including Labor Standards Provisions**
- **Disadvantaged Business Enterprise (DBE) Requirements***
- **Debarment/Suspension Certification***

*** Bidders should note these sections contain instructions regarding forms/information that must be completed/included with any submitted bid.**

Davis-Bacon/Prevailing Federal Wage Rates

P.L. 111-88 requires compliance with the Davis Bacon Act and adherence to the current U.S. Department of Labor Wage Decision. Attention is called to the fact that not less than the minimum salaries and wages as set forth in the Contract Documents (see Wage Decision included herein) must be paid on this project. The Wage Decision, including modifications, must be posted by the Contractor on the job site. A copy of the Federal Labor Standards Provisions is included and is hereby a part of this contract.

General Decision Number: MI190001 03/08/2019 MI1

Superseded General Decision Number: MI20180001

State: Michigan

Construction Types: Highway (Highway, Airport & Bridge xxxxx
and Sewer/Incid. to Hwy.)

Counties: Michigan Statewide.

Note: Under Executive Order (EO) 13658, an hourly minimum wage of $10.60 for calendar year 2019 applies to all contracts subject to the Davis-Bacon Act for which the contract is awarded (and any solicitation was issued) on or after January 1, 2015. If this contract is covered by the EO, the contractor must pay all workers in any classification listed on this wage determination at least $10.60 per hour (or the applicable wage rate listed on this wage determination, if it is higher) for all hours spent performing on the contract in calendar year 2019. If this contract is covered by the EO and a classification considered necessary for performance of work on the contract does not appear on this wage determination, the contractor must pay workers in that classification at least the wage rate determined through the conformance process set forth in 29 CFR 5.5(a)(1)(ii) (or the EO minimum wage rate,if it is higher than the conformed wage rate). The EO minimum wage rate will be adjusted annually. Please note that this EO applies to the above-mentioned types of contracts entered into by the federal government that are subject to the Davis-Bacon Act itself, but it does not apply to contracts subject only to the Davis-Bacon Related Acts, including those set forth at 29 CFR 5.1(a)(2)-(60). Additional information on contractor requirements and worker protections under the EO is available at www.dol.gov/whd/govcontracts.

Modification Number	Publication Date
0	01/04/2019
1	01/25/2019
2	03/08/2019

CARP0004-004 06/01/2018

REMAINDER OF STATE

	Rates	Fringes
CARPENTER (Piledriver).....	$ 27.12	20.19

CARP0004-005 06/01/2018

LIVINGSTON (Townships of Brighton, Deerfield, Genoa, Hartland, Oceola & Tyrone), MACOMB, MONROE, OAKLAND, SANILAC, ST. CLAIR AND WAYNE COUNTIES

	Rates	Fringes
CARPENTER (Piledriver).....	$ 30.50	27.28

ELEC0017-005 06/04/2018

STATEWIDE

	Rates	Fringes
Line Construction		
Groundman/Driver	$ 28.33	6.45+29%
Journeyman Signal Tech, Communications Tech, Tower Tech & Fiber Optic Splicers	$ 39.31	6.45+29%
Journeyman Specialist	$ 45.21	6.45+29%
Operator A	$ 33.22	6.45+29%
Operator B	$ 31.02	6.45+29%

Classifications

Journeyman Specialist: Refers to a crew of only one person working alone.
Operator A: Shall be proficient in operating all power equipment including: Backhoe, Excavator, Directional Bore and Boom/Digger truck.
Operator B: Shall be proficient in operating any 2 of the above mentioned pieces of equipment listed under Operator A.

ENGI0324-003 06/01/2018

ALCONA, ALPENA, ARENAC, BAY, CHEBOYGAN, CLARE, CLINTON, CRAWFORD, GENESEE, GLADWIN, GRATIOT, HURON, INGHAM, IOSCO, ISABELLA, JACKSON, LAPEER, LENAWEE, LIVINGSTON, MACOMB, MIDLAND, MONROE, MONTMORENCY, OAKLAND, OGEMAW, OSCODA, OTSEGO, PRESQUE ISLE, ROSCOMMON, SAGINAW, ST. CLAIR, SANILAC, SHIAWASSEE, TUSCOLA, WASHTENAW AND WAYNE COUNTIES:

	Rates	Fringes
OPERATOR: Power Equipment (Steel Erection)		
GROUP 1	$ 45.37	23.85
GROUP 2	$ 46.37	23.85
GROUP 3	$ 43.87	23.85
GROUP 4	$ 44.87	23.85
GROUP 5	$ 42.37	23.85
GROUP 6	$ 43.37	23.85
GROUP 7	$ 42.10	23.85
GROUP 8	$ 43.10	23.85
GROUP 9	$ 41.65	23.85
GROUP 10	$ 42.65	23.85
GROUP 11	$ 40.92	23.85
GROUP 12	$ 41.92	23.85
GROUP 13	$ 40.56	23.85
GROUP 14	$ 41.56	23.85
GROUP 15	$ 39.92	23.85
GROUP 16	$ 37.82	23.85
GROUP 17	$ 23.64	11.00
GROUP 18	$ 27.08	11.00

FOOTNOTE:

Paid Holidays: New Year's Day, Memorial Day, Fourth of July, Labor Day, Thanksgiving Day and Christmas Day.

POWER EQUIPMENT OPERATOR CLASSIFICATIONS

GROUP 1: Engineer when operating combination of boom and jib 400' or longer

GROUP 2: Engineer when operating combination of boom and jib 400' or longer on a crane that requires an oiler

GROUP 3: Engineer when operating combination of boom and jib 300' or longer

GROUP 4: Engineer when operating combination of boom and jib 300' or longer on a crane that requires an oiler

GROUP 5: Engineer when operating combination of boom and jib 220' or longer

GROUP 6: Engineer when operating combination of boom and jib 220' or longer on a crane that requires an oiler

GROUP 7: Engineer when operating combination of boom and jib 140' or longer

GROUP 8: Engineer when operating combination of boom and jib 140' or longer on a crane that requires an oiler

GROUP 9: Tower crane & derrick operator (where operator's work station is 50 ft. or more above first sub-level)

GROUP 10: Tower crane & derrick operator (where operator's work station is 50 ft. or more above first sub-level) on a crane that requires an oiler

GROUP 11: Engineer when operating combination of boom and jib 120' or longer

GROUP 12: Engineer when operating combination of boom and jib 120' or longer on a crane that requires an oiler

GROUP 13: Crane operator; job mechanic and 3 drum hoist and excavator

GROUP 14: Crane operator on a crane that requires an oiler

GROUP 15: Hoisting operator; 2 drum hoist and rubber tired backhoe

GROUP 16: Forklift and 1 drum hoist

GROUP 17: Compressor or welder operator

GROUP 18: Oiler

ENGI0324-004 06/01/2018

AREA 1: ALLEGAN, BARRY, BERRIEN, BRANCH, CALHOUN, CASS, EATON, HILLSDALE, IONIA, KALAMAZOO, KENT, LAKE, MANISTEE, MASON, MECOSTA, MONTCALM, MUSKEGON, NEWAYGO, OCEANA, OSCEOLA, OTTAWA, ST. JOSEPH, VAN BUREN

AREA 2: ANTRIM, BENZIE, CHARLEVOIX, EMMET, GRAND TRAVERSE, KALKASKA, LEELANAU, MISSAUKEE AND WEXFORD COUNTIES:

	Rates	Fringes

OPERATOR: Power Equipment
(Steel Erection)

AREA 1		
GROUP 1	$ 45.37	23.85
GROUP 2	$ 42.10	23.85
GROUP 3	$ 40.56	23.85
GROUP 4	$ 37.82	23.85
GROUP 5	$ 23.64	11.00
GROUP 6	$ 27.08	11.00
AREA 2		
GROUP 1	$ 45.37	23.85
GROUP 2	$ 42.10	23.85
GROUP 3	$ 40.56	23.85
GROUP 4	$ 37.82	23.85
GROUP 5	$ 23.64	11.00
GROUP 6	$ 27.08	11.00

FOOTNOTES:

Crane operator with main boom and jib 300' or longer: $1.50 additional to the group 1 rate. Crane operator with main boom and jib 400' or longer: $3.00 additional to the group 1 rate.
PAID HOLIDAYS: New Year's Day, Memorial Day, Fourth of July, Labor Day, Thanksgiving Day and Christmas Day.

POWER EQUIPMENT OPERATOR CLASSIFICATIONS:

GROUP 1: Crane Operator with main boom & jib 400', 300', or 220' or longer.

GROUP 2: Crane Operator with main boom & jib 140' or longer, Tower Crane; Gantry Crane; Whirley Derrick.

GROUP 3: Regular Equipment Operator, Crane, Dozer, Loader, Hoist, Straddle Wagon, Mechanic, Grader and Hydro Excavator.

GROUP 4: Air Tugger (single drum), Material Hoist Pump 6" or over, Elevators, Brokk Concrete Breaker.

GROUP 5: Air Compressor, Welder, Generators, Conveyors

GROUP 6: Oiler and fire tender

ENGI0324-005 09/01/2018

AREA 1: GENESEE, LAPEER, LIVINGSTON, MACOMB, MONROE, OAKLAND, ST. CLAIR, WASHTENAW AND WAYNE COUNTIES

AREA 2: ALCONA, ALLEGAN, ALGER, ALPENA, ANTRIM, ARENAC, BARAGA, BARRY, BAY, BENZIE, BERRIEN, BRANCH, CALHOUN, CASS, CHARLEVOIX, CHEBOYGAN, CHIPPEWA, CLARE, CLINTON, CRAWFORD, DELTA, DICKINSON, EATON, EMMET, GLADWIN, GOGEBIC, GRAND TRAVERSE, GRATIOT, HILLSDALE, HOUGHTON, HURON, INGHAM, IONIA, IOSCO, IRON, ISABELLA, JACKSON, KALAMAZOO, KALKASKA, KENT, KWEENAW, LAKE, LEELANAU, LENAWEE, LUCE, MACKINAC, MANISTEE, MARQUETTE, MASON, MECOSTA, MENOMINEE, MIDLAND, MISSAUKEE, MONTCALM, MONTMORENCY, MUSKEGON, NEWAYGO, OCEANA, OGEMAW, ONTONAGON, OSCEOLA, OSCODA, OTSEGO, OTTAWA, PRESQUE ISLE, ROSCOMMON, SAGINAW, SANILAC, SCHOOLCRAFT, SHIAWASSEE, ST. JOSEPH, TUSCOLA, VAN BUREN AND WEXFORD COUNTIES

	Rates	Fringes

```
OPERATOR:  Power Equipment
(Underground construction
(including sewer))
     AREA 1:
      GROUP 1...................$ 32.53            23.85
      GROUP 2...................$ 27.80            23.85
      GROUP 3...................$ 27.07            23.85
      GROUP 4...................$ 26.50            23.85
     AREA 2:
      GROUP 1...................$ 30.82            23.85
      GROUP 2...................$ 25.93            23.85
      GROUP 3...................$ 25.43            23.85
      GROUP 4...................$ 25.15            23.85

POWER EQUIPMENT OPERATOR CLASSIFICATIONS

  GROUP 1: Backfiller tamper; Backhoe; Batch plant operator
  (concrete); Clamshell; Concrete paver (2 drums or larger);
  Conveyor loader (Euclid type); Crane (crawler, truck type
  or pile driving); Dozer; Dragline; Elevating grader;
  Endloader; Gradall (and similar type machine); Grader;
  Mechanic; Power shovel; Roller (asphalt); Scraper
  (self-propelled or tractor drawn); Side boom tractor (type
  D-4 or equivalent and larger); Slip form paver; Slope
  paver; Trencher (over 8 ft. digging capacity); Well
  drilling rig; Concrete pump with boom operator; Hydro
  Excavator

  GROUP 2: Boom truck (power swing type boom); Crusher; Hoist;
  Pump (1 or more - 6-in. discharge or larger - gas or
  diesel- powered or powered by generator of 300 amperes or
  more - inclusive of generator); Side boom tractor (smaller
  than type D-4 or equivalent); Tractor (pneu-tired, other
  than backhoe or front end loader); Trencher (8-ft. digging
  capacity and smaller);Vac Truck

  GROUP 3: Air compressors (600 cfm or larger); Air compressors
  (2 or more-less than 600 cfm); Boom truck (non-swinging,
  non- powered type boom); Concrete breaker (self-propelled
  or truck mounted - includes compressor); Concrete paver (1
  drum-l/2 yd. or larger); Elevator (other than passenger);
  Maintenance person; Pump (2 or more-4-in. up to 6-in.
  discharge-gas or diesel powered - excluding submersible
  pumps); Pumpcrete machine (and similar equipment); Wagon
  drill (multiple); Welding machine or generator (2 or
  more-300 amp. or larger - gas or diesel powered)

  GROUP 4: Boiler; Concrete saw (40 hp or over); Curing machine
  (self-propelled); Farm tractor (with attachment); Finishing
  machine (concrete); Fire person; Hydraulic pipe pushing
  machine; Mulching equipment; Oiler; Pumps (2 or more up to
  4-in. discharge, if used 3 hours or more a day, gas or
  diesel powered - excluding submersible pumps); Roller
  (other than asphalt); Stump remover; Trencher (service);
  Vibrating compaction equipment, self-propelled (6 ft. wide
  or over); End dump operator; Sweeper (Wayne type); Water
  wagon and Extend-a boom forklift

-------------------------------------------------------------------
 ENGI0324-006 06/01/2018

AREA 1: GENESEE, MACOMB, MONROE, OAKLAND, WASHTENAW AND WAYNE
COUNTIES
AREA 2: ALCONA, ALGER, ALLEGAN, ALPENA, ANTRIM, ARENAC, BARAGA,
```

BARRY, BAY, BENZIE, BERRIEN, BRANCH, CALHOUN, CASS, CHARLEVOIX, CHEBOYGAN, CHIPPEWA, CLARE, CLINTON, CRAWFORD, DELTA, DICKINSON, EATON, EMMET, GLADWIN, GOGEBIC, GRAND TRAVERSE, GRATIOT, HILLSDALE, HOUGHTON, HURON, INGHAM, IONIA, IOSCO, IRON, ISABELLA, JACKSON, KALAMAZOO, KALKASKA, KENT, KEWEENAW, LAKE, LAPEER, LEELANAU, LENAWEE, LIVINGSTON, LUCE, MACKINAC, MANISTEE, MARQUETTE, MASON, MECOSTA, MENOMINEE, MIDLAND, MISSAUKEE, MONTCALM, MONTMORENCY, MUSKEGON, NEWAYGO, OCEANA, OGEMAW, ONTONAGON, OSCEOLA, OSCODA, OTSEGO, OTTAWA, PRESQUE ISLE, ROSCOMMON, SAGINAW, ST. CLARE, ST. JOSEPH, SANILAC, SCHOOLCRAFT, SHIAWASSEE, TUSCOLA, VAN BUREN AND WEXFORD COUNTIES

	Rates	Fringes
Power equipment operators: (AIRPORT, BRIDGE & HIGHWAY CONSTRUCTION)		
AREA 1		
GROUP 1	$ 33.36	23.90
GROUP 2	$ 26.63	23.90
GROUP 3	$ 27.93	23.90
GROUP 4	$ 25.90	23.90
GROUP 5	$ 20.70	11.00
AREA 2		
GROUP 1	$ 33.36	23.90
GROUP 2	$ 26.63	23.90
GROUP 3	$ 27.93	23.90
GROUP 4	$ 25.90	23.90
GROUP 5	$ 20.70	11.00

POWER EQUIPMENT OPERATOR CLASSIFICATIONS

GROUP 1: Asphalt plant operator; Crane operator (does not include work on bridge construction projects when the crane operator is erecting structural components); Dragline operator; Shovel operator; Locomotive operator; Paver operator (5 bags or more); Elevating grader operator; Pile driving operator; Roller operator (asphalt); Blade grader operator; Trenching machine operator (ladder or wheel type); Auto-grader; Slip form paver; Self-propelled or tractor-drawn scraper; Conveyor loader operator (Euclid type); Endloader operator (1 yd. capacity and over); Bulldozer; Hoisting engineer; Tractor operator; Finishing machine operator (asphalt); Mechanic; Pump operator (6-in. discharge or over, gas, diesel powered or generator of 300 amp. or larger); Shouldering or gravel distributing machine operator (self- propelled); Backhoe (with over 3/8 yd. bucket); Side boom tractor (type D-4 or equivalent or larger); Tube finisher (slip form paving); Gradall (and similar type machine); Asphalt paver (self- propelled); Asphalt planer (self-propelled); Batch plant (concrete-central mix); Slurry machine (asphalt); Concrete pump (3 in. and over); Roto-mill; Swinging boom truck (over 12 ton capacity); Hydro demolisher (water blaster); Farm-type tractor with attached pan

GROUP 2: Screening plant operator; Washing plant operator; Crusher operator; Backhoe (with 3/8 yd. bucket or less); Side boom tractor (smaller than D-4 type or equivalent); Sweeper (Wayne type and similar equipment); Vacuum truck operator; Batch plant (concrete dry batch)

GROUP 3: Grease Truck

GROUP 4: Air compressor operator (600 cu. ft. per min or more); Air compressor operator (two or more, less than 600 cfm); Wagon drill operator; Concrete breaker; Tractor operator (farm type with attachment)

GROUP 5: Boiler fire tender; Oiler; Fire tender; Trencher (service); Flexplane operator; Cleftplane operator; Grader operator (self-propelled fine-grade or form (concrete)); Finishing machine operator (concrete); Boom or winch hoist truck operator; Endloader operator (under 1 yd. capacity); Roller operator (other than asphalt); Curing equipment operator (self-propelled); Concrete saw operator (40 h.p. or over); Power bin operator; Plant drier operator (asphalt); Vibratory compaction equipment operator (6 ft. wide or over); Guard post driver operator (power driven); All mulching equipment; Stump remover; Concrete pump (under 3-in.); Mesh installer (self- propelled); Tractor operator (farm type); End dump; Skid steer

---

ENGI0324-007 05/01/2018

ALGER, BARAGA, CHIPPEWA, DELTA, DICKINSON, GOGEBIC, HOUGHTON, IRON, KEWEENAW, LUCE, MACKINAC MARQUETTE, MENOMINEE, ONTONAGON AND SCHOOLCRAFT COUNTIES:

	Rates	Fringes
OPERATOR: Power Equipment (Steel Erection)		
Compressor, welder and forklift	$ 29.58	23.60
Crane operator, main boom & jib 120' or longer	$ 35.57	23.60
Crane operator, main boom & jib 140' or longer	$ 35.85	23.60
Crane operator, main boom & jib 220' or longer	$ 36.39	23.60
Mechanic with truck and tools	$ 34.76	23.60
Oiler and fireman	$ 28.16	23.60
Regular operator	$ 33.12	23.60

ENGI0324-008 10/01/2015

ALCONA, ALGER, ALLEGAN, ALPENA, ANTRIM, ARENAC, BARAGA, BARRY, BAY, BENZIE, BERRIEN, BRANCH, CALHOUN, CASS, CHARLEVOIX, CHEBOYGAN, CHIPPEWA, CLARE, CLINTON, CRAWFORD, DELTA, DICKINSON, EATON, EMMET, GENESEE, GLADWIN, GOGEBIC, GRAND TRAVERSE, GRATIOT, HILLSDALE, HOUGHTON, HURON, INGHAM, IONIA, IOSCO, IRON, ISABELLA, JACKSON, KALAMAZOO, KALKASKA, KENT, KEWEENAW, LAKE, LAPEER, LEELANAU, LENAWEE, LIVINGSTON, LUCE, MACKINAC, MACOMB, MANISTEE, MARQUETTE, MASON, MECOSTA, MENOMINEE, MIDLAND, MISSAUKEE, MONTCALM, MONTMORENCY, MONROE, MUSKEGON, NEWAYGO, OAKLAND, OCEANA, OGEMAW, ONTONAGON, OSCEOLA, OSCODA, OTSEGO, OTTAWA, PRESQUE ISLE, ROSCOMMON, SAGINAW, ST. CLARE, ST. JOSEPH, SANILAC, SCHOOLCRAFT, SHIAWASSEE, TUSCOLA, VAN BUREN, WASHTENAW, WAYNE AND WEXFORD COUNTIES

	Rates	Fringes
OPERATOR: Power Equipment (Sewer Relining)		

```
     GROUP 1....................$ 30.70            12.93
     GROUP 2....................$ 29.17            12.93

SEWER RELINING CLASSIFICATIONS

  GROUP 1: Operation of audio-visual closed circuit TV system,
  including remote in-ground cutter and other equipment used
  in connection with the CCTV system

  GROUP 2: Operation of hot water heaters and circulation
  systems, water jetters and vacuum and mechanical debris
  removal systems

-----------------------------------------------------------------
 ENGI0325-012 05/01/2018

                                  Rates          Fringes

Power equipment operators -
gas distribution and duct
installation work:
     GROUP 1....................$ 30.68            23.85
     GROUP 2....................$ 30.56            23.85
     GROUP 3....................$ 28.85            23.85

  SCOPE OF WORK: The construction, installation, treating and
  reconditioning of pipelines transporting gas vapors within
  cities, towns, subdivisions, suburban areas, or within
  private property boundaries, up to and including private
  meter settings of private industrial, governmental or other
  premises, more commonly referred to as "distribution work,"
  starting from the first metering station, connection,
  similar or related facility, of the main or cross country
  pipeline and including duct installation.

  Group 1:   Backhoe, crane, grader, mechanic, dozer (D-6
  equivalent or larger), side boom (D-4 equivalent or
  larger), trencher(except service), endloader (2 yd.
  capacity or greater).

  GROUP 2:  Dozer (less than D-6 equivalent), endloader (under
  2 yd. capacity), side boom (under D-4 capacity),
  backfiller, pumps (1 or 2 of 6-inch discharge or greater),
  boom truck (with powered boom), tractor (wheel type other
  than backhoe or front endloader).  Tamper (self-propelled),
  boom truck (with non-powered boom), concrete saw (20 hp or
  larger), pumps (2 to 4 under 6-inch discharge), compressor
  (2 or more or when one is used continuously into the second
  day) and trencher(service).

  GROUP 3:  Oiler, hydraulic pipe pushing machine, grease
  person and hydrostatic testing operator.

-----------------------------------------------------------------
* IRON0008-007 06/01/2018

ALGER, BARAGA, CHIPPEWA, DELTA, DICKINSON, GOGEBIC, HOUGHTON,
IRON, KEWEENAW, LUCE, MACKINAC MARQUETTE, MENOMINEE, ONTONAGON
AND SCHOOLCRAFT COUNTIES:


                                  Rates          Fringes

Ironworker - pre-engineered
metal building erector...........$ 23.70             6.95
```

```
IRONWORKER
     General contracts
     $10,000,000 or greater......$ 30.92           26.97
     General contracts less
     than $10,000,000............$ 30.92           26.97

  Paid Holidays: New Year's Day, Memorial Day, July 4th, Labor
  Day, Thanksgiving Day & Christmas Day.

----------------------------------------------------------------
 IRON0025-002 06/01/2018

ALCONA, ALPENA, ARENAC, BAY, CHEBOYGAN, CLARE, CLINTON,
CRAWFORD, GENESEE, GLADWIN, GRATIOT, HURON, INGHAM, IOSCO,
ISABELLA, JACKSON, LAPEER, LIVINGSTON, MACOMB, MIDLAND,
MONTMORENCY, OAKLAND, OGEMAW, OSCODA, OTSEGO, PRESQUE ISLE,
ROSCOMMON, SAGINAW, SANILAC, SHIAWASSEE, ST. CLAIR, TUSCOLA,
WASHTENAW AND WAYNE COUNTIES:


                                   Rates          Fringes

Ironworker - pre-engineered
metal building erector
     Alcona, Alpena, Arenac,
     Cheboygan, Clare, Clinton,
     Crawford, Gladwin,
     Gratiot, Huron, Ingham,
     Iosco, Isabella, Jackson,
     Lapeer, Livingston (west
     of Burkhardt Road),
     Montmorency, Ogemaw,
     Oscoda, Otsego, Presque
     Isle, Roscommon, Sanilac,
     Shiawassee, Tuscola &
     Washtenaw (west of U.S. 23).$ 24.26           22.11
     Bay, Genesee, Lapeer,
     Livingston (east of
     Burkhardt Road), Macomb,
     Midland, Oakland, Saginaw,
     St. Clair, The University
     of Michigan, Washtenaw
     (east of U.S. 23) & Wayne...$ 25.48           23.11
IRONWORKER
     Ornamental and Structural...$ 35.52           28.65
     Reinforcing................$ 29.48           27.74
----------------------------------------------------------------
* IRON0055-005 07/01/2018

LENAWEE AND MONROE COUNTIES:

                                   Rates          Fringes

IRONWORKER
     Pre-engineered metal
     buildings..................$ 23.59           19.35
     All other work.............$ 30.13           23.25
----------------------------------------------------------------
* IRON0292-003 06/01/2018

BERRIEN AND CASS COUNTIES:

                                   Rates          Fringes

IRONWORKER (Including
```

```
pre-engineered metal building
erector).......................$ 29.75           22.01
----------------------------------------------------------------
 IRON0340-001 06/19/2017

ALLEGAN, ANTRIM, BARRY, BENZIE, BRANCH, CALHOUN, CHARLEVOIX,
EATON, EMMET, GRAND TRAVERSE, HILLSDALE, IONIA, KALAMAZOO,
KALKASKA, KENT, LAKE, LEELANAU, MANISTEE, MASON, MECOSTA,
MISSAUKEE, MONTCALM, MUSKEGON, NEWAYGO, OCEANA, OSCEOLA,
OTTAWA, ST. JOSEPH, VAN BUREN AND WEXFORD COUNTIES:


                                  Rates          Fringes

IRONWORKER (Including
pre-engineered metal building
erector).......................$ 24.43           24.67
----------------------------------------------------------------
 LABO0005-006 10/01/2017

                                  Rates          Fringes

Laborers - hazardous waste
abatement: (ALCONA, ALPENA,
ANTRIM, BENZIE, CHARLEVOIX,
CHEBOYGAN, CRAWFORD, EMMET,
GRAND TRAVERSE, IOSCO,
KALKASKA, LEELANAU,
MISSAUKEE, MONTMORENCY,
OSCODA, OTSEGO, PRESQUE ISLE
AND WEXFORD COUNTIES - Zone
10)
     Levels A, B or C............$ 17.45           12.75
      class b...................$ 18.00           12.85
     Work performed in
     conjunction with site
     preparation not requiring
     the use of personal
     protective equipment;
     Also, Level D..............$ 16.45           12.75
      class a...................$ 17.00           12.85
  Zone 10
Laborers - hazardous waste
abatement: (ALGER, BARAGA,
CHIPPEWA, DELTA, DICKINSON,
GOGEBIC, HOUGHTON, IRON,
KEWEENAW, LUCE, MACKINAC,
MARQUETTE, MENOMINEE,
ONTONAGON AND SCHOOLCRAFT
COUNTIES - Zone 11)
     Levels A, B or C............$ 21.63           12.88
     Work performed in
     conjunction with site
     preparation not requiring
     the use of personal
     protective equipment;
     Also, Level D..............$ 20.63           12.88
Laborers - hazardous waste
abatement: (ALLEGAN, BARRY,
BERRIEN, BRANCH, CALHOUN,
CASS, IONIA COUNTY (except
the city of Portland);
KALAMAZOO, KENT, LAKE,
MANISTEE, MASON, MECOSTA,
MONTCALM, MUSKEGON, NEWAYGO,
```

OCEANA, OSCEOLA, OTTAWA, ST.
JOSEPH AND VAN BUREN COUNTIES
- Zone 9)
Levels A, B or C.....$ 20.95 12.85
Work performed in
conjunction with site
preparation not requiring
the use of personal
protective equipment;
Also, Level D.....$ 19.95 12.85
Laborers - hazardous waste
abatement: (ARENAC, BAY,
CLARE, GLADWIN, GRATIOT,
HURON, ISABELLA, MIDLAND,
OGEMAW, ROSCOMMON, SAGINAW
AND TUSCOLA COUNTIES - Zone 8)
Levels A, B or C.....$ 20.65 12.85
Work performed in
conjunction with site
preparation not requiring
the use of personal
protective equipment;
Also, Level D.....$ 19.65 12.85
Laborers - hazardous waste
abatement: (CLINTON, EATON
AND INGHAM COUNTIES; IONIA
COUNTY (City of Portland);
LIVINGSTON COUNTY (west of
Oak Grove Rd., including the
City of Howell) - Zone 6)
Levels A, B or C.....$ 24.65 12.85
Work performed in
conjunction with site
preparation not requiring
the use of personal
protective equipment;
Also, Level D.....$ 23.65 12.85
Laborers - hazardous waste
abatement: (GENESEE, LAPEER
AND SHIAWASSEE COUNTIES -
Zone 7)
Levels A, B or C.....$ 23.61 13.41
Work performed in
conjunction with site
preparation not requiring
the use of personal
protective equipment;
Also, Level D.....$ 22.61 13.41
Laborers - hazardous waste
abatement: (HILLSDALE,
JACKSON AND LENAWEE COUNTIES
- Zone 4)
Levels A, B or C.....$ 24.19 12.85
Work performed in
conjunction with site
preparation not requiring
the use of personal
protective equipment;
Also, Level D.....$ 23.19 12.85
Laborers - hazardous waste
abatement: (LIVINGSTON COUNTY
(east of Oak Grove Rd. and
south of M-59, excluding the
city of Howell); AND
WASHTENAW COUNTY - Zone 3)

```
     Levels A, B or C............$ 29.70            14.20
     Work performed in
     conjunction with site
     preparation not requiring
     the use of personal
     protective equipment;
     Also, Level D..............$ 28.70            14.20
 Laborers - hazardous waste
 abatement: (MACOMB AND WAYNE
 COUNTIES - Zone 1)
     Levels A, B or C............$ 28.35            16.75
     Work performed in
     conjunction with site
     preparation not requiring
     the use of personal
     protective equipment;
     Also, Level D..............$ 27.35            16.75
 Laborers - hazardous waste
 abatement: (MONROE COUNTY -
 Zone 4)
     Levels A, B or C............$ 30.85            14.45
     Work performed in
     conjunction with site
     preparation not requiring
     the use of personal
     protective equipment;
     Also, Level D..............$ 29.84            14.45
 Laborers - hazardous waste
 abatement: (OAKLAND COUNTY
 and the Northeast portion of
 LIVINGSTON COUNTY bordered by
 Oak Grove Road on the West
 and M-59 on the South - Zone
 2)
     Level A, B, C..............$ 28.85            16.75
     Work performed in
     conjunction with site
     preparation not requiring
     the use of personal
     protective equipment;
     Also, Level D..............$ 27.85            16.75
 Laborers - hazardous waste
 abatement: (SANILAC AND ST.
 CLAIR COUNTIES - Zone 5)
     Levels A, B or C............$ 25.19            15.86
     Work performed in
     conjunction with site
     preparation not requiring
     the use of personal
     protective equipment;
     Also, Level D..............$ 24.19            15.86
 ----------------------------------------------------------------
  LABO0259-001 09/01/2018

 AREA 1: MACOMB, OAKLAND AND WAYNE COUNTIES
 AREA 2: ALCONA, ALGER, ALLEGAN, ALPENA, ANTRIM, ARENAC, BARAGA,
 BARRY, BAY, BENZIE, BERRIEN, BRANCH, CALHOUN, CASS, CHARLEVOIX,
 CHEBOYGAN, CHIPPEWA, CLARE, CLINTON, CRAWFORD, DELTA,
 DICKINSON, EATON, EMMET, GENESEE, GLADWIN, GOGEBIC, GRAND
 TRAVERSE, GRATIOT, HILLSDALE, HOUGHTON, HURON, INGHAM, IONIA,
 IOSCO, IRON, ISABELLA, JACKSON, KALAMAZOO, KALKASKA, KENT,
 KEWEENAW, LAKE, LAPEER,  LEELANAU, LENAWEE, LIVINGSTON, LUCE,
 MACKINAC, MANISTEE, MARQUETTE, MASON, MECOSTA, MENOMINEE,
 MIDLAND, MISSAUKEE, MONROE, MONTCALM, MONTMORENCY, MUSKEGON,
 NEWAYGO, OCEANA, OGEMAW, ONTONAGON, OSCEOLA, OSCODA, OTSEGO,
```

OTTAWA, PRESQUE ISLE, ROSCOMMON, SAGINAW, ST. CLARE, ST. JOSEPH, SANILAC, SCHOOLCRAFT, SHIAWASSEE, TUSCOLA, VAN BUREN, WASHTENAW AND WEXFORD COUNTIES

	Rates	Fringes
Laborers - tunnel, shaft and caisson:		
AREA 1		
GROUP 1	$ 22.57	16.80
GROUP 2	$ 22.68	16.80
GROUP 3	$ 22.74	16.80
GROUP 4	$ 22.92	16.80
GROUP 5	$ 23.17	16.80
GROUP 6	$ 23.50	16.80
GROUP 7	$ 16.78	16.80
AREA 2		
GROUP 1	$ 24.10	12.85
GROUP 2	$ 24.19	12.85
GROUP 3	$ 24.29	12.85
GROUP 4	$ 24.45	12.85
GROUP 5	$ 24.71	12.85
GROUP 6	$ 25.02	12.85
GROUP 7	$ 17.29	12.85

SCOPE OF WORK: Tunnel, shaft and caisson work of every type and description and all operations incidental thereto, including, but not limited to, shafts and tunnels for sewers, water, subways, transportation, diversion, sewerage, caverns, shelters, aquafers, reservoirs, missile silos and steel sheeting for underground construction.

TUNNEL LABORER CLASSIFICATIONS

GROUP 1: Tunnel, shaft and caisson laborer, dump, shanty, hog house tender, testing (on gas) and watchman

GROUP 2: Manhole, headwall, catch basin builder, bricklayer tender, mortar machine and material mixer

GROUP 3: Air tool operator (jackhammer, bush hammer and grinder), first bottom, second bottom, cage tender, car pusher, carrier, concrete, concrete form, concrete repair, cement invert laborer, cement finisher, concrete shoveler, conveyor, floor, gasoline and electric tool operator, gunite, grout operator, welder, heading dinky person, inside lock tender, pea gravel operator, pump, outside lock tender, scaffold, top signal person, switch person, track, tugger, utility person, vibrator, winch operator, pipe jacking, wagon drill and air track operator and concrete saw operator (under 40 h.p.)

GROUP 4: Tunnel, shaft and caisson mucker, bracer, liner plate, long haul dinky driver and well point

GROUP 5: Tunnel, shaft and caisson miner, drill runner, key board operator, power knife operator, reinforced steel or mesh (e.g. wire mesh, steel mats, dowel bars, etc.)

GROUP 6: Dynamite and powder

GROUP 7: Restoration laborer, seeding, sodding, planting, cutting, mulching and top soil grading; and the restoration of property such as replacing mailboxes, wood chips,

planter boxes, flagstones, etc.

LABO0334-001 09/01/2018

	Rates	Fringes
Laborers - open cut:		
ZONE 1 - MACOMB, OAKLAND AND WAYNE COUNTIES:		
GROUP 1	$ 22.42	16.80
GROUP 2	$ 22.53	16.80
GROUP 3	$ 22.58	16.80
GROUP 4	$ 22.66	16.80
GROUP 5	$ 22.72	16.80
GROUP 6	$ 20.17	16.80
GROUP 7	$ 16.79	16.80
ZONE 2 - LIVINGSTON COUNTY (east of M-151 (Oak Grove Rd.)); MONROE AND WASHTENAW COUNTIES:		
GROUP 1	$ 23.75	12.85
GROUP 2	$ 23.86	12.85
GROUP 3	$ 23.98	12.85
GROUP 4	$ 24.05	12.85
GROUP 5	$ 24.20	12.85
GROUP 6	$ 21.50	12.85
GROUP 7	$ 18.14	12.85
ZONE 3 - CLINTON, EATON, GENESEE, HILLSDALE AND INGHAM COUNTIES; IONIA COUNTY (City of Portland); JACKSON, LAPEER AND LENAWEE COUNTIES; LIVINGSTON COUNTY (west of M-151 Oak Grove Rd.); SANILAC, ST. CLAIR AND SHIAWASSEE COUNTIES:		
GROUP 1	$ 21.94	12.85
GROUP 2	$ 22.08	12.85
GROUP 3	$ 22.20	12.85
GROUP 4	$ 22.25	12.85
GROUP 5	$ 22.39	12.85
GROUP 6	$ 19.69	12.85
GROUP 7	$ 16.84	12.85
ZONE 4 - ALCONA, ALLEGAN, ALPENA, ANTRIM, ARENAC, BARRY, BAY, BENZIE, BERRIEN, BRANCH, CALHOUN, CASS, CHARLEVOIX, CHEBOYGAN, CLARE, CRAWFORD, EMMET, GLADWIN, GRAND TRAVERSE, GRATIOT AND HURON COUNTIES; IONIA COUNTY (EXCEPT THE CITY OF PORTLAND); IOSCO, ISABELLA, KALAMAZOO, KALKASKA, KENT, LAKE,LEELANAU, MANISTEE, MASON, MECOSTA, MIDLAND, MISSAUKEE, MONTCALM, MONTMORENCY, MUSKEGON, NEWAYGO, OCEANA, OGEMAW, OSCEOLA, OSCODA, OTSEGO,		

OTTAWA, PRESQUE ISLE,
ROSCOMMON, SAGINAW, ST.
JOSEPH, TUSCOLA, VAN BUREN
AND WEXFORD COUNTIES:

GROUP 1	$ 20.97	12.85
GROUP 2	$ 21.10	12.85
GROUP 3	$ 21.21	12.85
GROUP 4	$ 21.28	12.85
GROUP 5	$ 21.40	12.85
GROUP 6	$ 18.62	12.85
GROUP 7	$ 16.96	12.85

ZONE 5 - ALGER, BARAGA,
CHIPPEWA, DELTA,
DICKINSON, GOGEBIC,
HOUGHTON, IRON,
KEWEENAW, LUCE, MACKINAC,
MARQUETTE, MENOMINEE,
ONTONAGON AND SCHOOLCRAFT
COUNTIES:

GROUP 1	$ 21.19	12.85
GROUP 2	$ 21.33	12.85
GROUP 3	$ 21.46	12.85
GROUP 4	$ 21.51	12.85
GROUP 5	$ 21.56	12.85
GROUP 6	$ 18.94	12.85
GROUP 7	$ 17.05	12.85

SCOPE OF WORK:

Open cut construction work shall be construed to mean work which requires the excavation of earth including industrial, commercial and residential building site excavation and preparation, land balancing, demolition and removal of concrete and underground appurtenances, grading, paving, sewers, utilities and improvements; retention, oxidation, flocculation and irrigation facilities, and also including but not limited to underground piping, conduits, steel sheeting for underground construction, and all work incidental thereto, and general excavation. For all areas except the Upper Peninsula, open cut construction work shall also be construed to mean waterfront work, piers, docks, seawalls, breakwalls, marinas and all incidental work. Open cut construction work shall not include any structural modifications, alterations, additions and repairs to buildings, or highway work, including roads, streets, bridge construction and parking lots or steel erection work and excavation for the building itself and back filling inside of and within 5 ft. of the building and foundations, footings and piers for the building. Open cut construction work shall not include any work covered under Tunnel, Shaft and Caisson work.

OPEN CUT LABORER CLASSIFICATIONS

GROUP 1: Construction laborer

GROUP 2: Mortar and material mixer, concrete form person, signal person, well point person, manhole, headwall and catch basin builder, headwall, seawall, breakwall and dock builder

GROUP 3: Air, gasoline and electric tool operator, vibrator operator, driller, pump person, tar kettle operator, bracer, rodder, reinforced steel or mesh person (e.g., wire mesh, steel mats, dowel bars, etc.), welder, pipe jacking

and boring person, wagon drill and air track operator and concrete saw operator (under 40 h.p.), windlass and tugger person and directional boring person

GROUP 4: Trench or excavating grade person

GROUP 5: Pipe layer (including crock, metal pipe, multi-plate or other conduits)

GROUP 6: Grouting man, audio-visual television operations and all other operations in connection with closed circuit television inspection, pipe cleaning and pipe relining work and the installation and repair of water service pipe and appurtenances

GROUP 7: Restoration laborer, seeding, sodding, planting, cutting, mulching and top soil grading; and the restoration of property such as replacing mailboxes, wood chips, planter boxes, flagstones, etc.

LABO0465-001 06/01/2018

LABORER: Highway, Bridge and Airport Construction

AREA 1: GENESEE, MACOMB, MONROE, OAKLAND, WASHTENAW AND WAYNE COUNTIES

AREA 2: ALLEGAN, BARRY, BAY, BERRIEN, BRANCH, CALHOUN, CASS, CLINTON, EATON, GRATIOT, HILLSDALE, HURON, INGHAM, JACKSON, KALAMAZOO, LAPEER, LENAWEE, LIVINGSTON, MIDLAND, MUSKEGON, SAGINAW, SANILAC, SHIAWASSEE, ST. CLAIR, ST. JOSEPH, TUSCOLA AND VAN BUREN COUNTIES

AREA 3: ALCONA, ALPENA, ANTRIM, ARENAC, BENZIE, CHARLEVOIX, CHEBOYGAN, CLARE, CRAWFORD, EMMET, GLADWIN, GRAND TRAVERSE, IONIA, IOSCO, ISABELLA, KALKASKA, KENT, LAKE, LEELANAU, MANISTEE, MASON, MECOSTA, MISSAUKEE, MONTCALM, MONTMORENCY, NEWAYGO, OCEANA, OGEMAW, OSCEOLA, OSCODA, OTSEGO, OTTAWA, PRESQUE ISLE, ROSCOMMON AND WEXFORD COUNTIES

AREA 4: ALGER, BARAGA, CHIPPEWA, DELTA, DICKINSON, GOGEBIC, HOUGHTON, IRON, KEWEENAW, LUCE, MACKINAC, MARQUETTE, MENOMINEE, ONTONAGON AND SCHOOLCRAFT COUNTIES

	Rates	Fringes
LABORER (AREA 1)		
GROUP 1	$ 26.12	12.85
GROUP 2	$ 26.25	12.85
GROUP 3	$ 26.43	12.85
GROUP 4	$ 26.51	12.85
GROUP 5	$ 26.72	12.85
GROUP 6	$ 27.02	12.85
LABORER (AREA 2)		
GROUP 1	$ 24.02	12.85
GROUP 2	$ 24.22	12.85
GROUP 3	$ 24.46	12.85
GROUP 4	$ 24.81	12.85
GROUP 5	$ 24.68	12.85
GROUP 6	$ 25.02	12.85
LABORER (AREA 3)		
GROUP 1	$ 23.27	12.85
GROUP 2	$ 23.48	12.85

```
     GROUP 3.....................$ 23.77            12.85
     GROUP 4.....................$ 24.21            12.85
     GROUP 5.....................$ 23.83            12.85
     GROUP 6.....................$ 24.26            12.85
LABORER (AREA 4)
     GROUP 1.....................$ 23.32            12.85
     GROUP 2.....................$ 23.53            12.85
     GROUP 3.....................$ 23.82            12.85
     GROUP 4.....................$ 24.26            12.85
     GROUP 5.....................$ 23.88            12.85
     GROUP 6.....................$ 24.31            12.85

LABORER CLASSIFICATIONS

  GROUP 1: Asphalt shoveler or loader; asphalt plant misc.;
  burlap person; yard person; dumper (wagon, truck, etc.);
  joint filling laborer; miscellaneous laborer; unskilled
  laborer; sprinkler laborer; form setting laborer; form
  stripper; pavement reinforcing; handling and placing (e.g.,
  wire mesh, steel mats, dowel bars); mason's tender or
  bricklayer's tender on manholes; manhole builder;
  headwalls, etc.; waterproofing,(other than buildings) seal
  coating and slurry mix, shoring, underpinning; pressure
  grouting; bridge pin and hanger removal; material recycling
  laborer; horizontal paver laborer (brick, concrete, clay,
  stone and asphalt); ground stabilization and modification
  laborer; grouting; waterblasting; top person; railroad
  track and trestle laborer; carpenters' tender; guard rail
  builders' tender; earth retention barrier and wall and
  M.S.E. wall installer's tender; highway and median
  installer's tender(including sound, retaining, and crash
  barriers); fence erector's tender; asphalt raker tender;
  sign installer; remote control operated equipment.

  GROUP 2: Mixer operator (less than 5 sacks); air or electric
  tool operator (jackhammer, etc.); spreader; boxperson
  (asphalt, stone, gravel); concrete paddler; power chain saw
  operator; paving batch truck dumper; tunnel mucker (highway
  work only); concrete saw (under 40 h.p.) and dry pack
  machine; roto-mill grounds person.

  GROUP 3: Tunnel miner (highway work only); finishers tenders;
  guard rail builders; highway and median barrier installer;
  earth retention barrier and wall and M.S.E. wall
  installer's (including sound, retaining and crash
  barriers); fence erector; bottom person; powder person;
  wagon drill and air track operator; diamond and core
  drills; grade checker; certified welders; curb and side
  rail setter's tender.

GROUP 4: Asphalt raker

GROUP 5: Pipe layers, oxy-gun

  GROUP 6: Line-form setter for curb or pavement; asphalt
  screed checker/screw man on asphalt paving machines.

-----------------------------------------------------------------
 LABO1076-005 04/01/2018

MICHIGAN STATEWIDE

                                   Rates          Fringes

LABORER (DISTRIBUTION WORK)
```

```
      Zone 1.....................$ 20.27           12.85
      Zone 2.....................$ 18.59           12.85
      Zone 3.....................$ 16.76           12.85
      Zone 4.....................$ 16.12           12.85
      Zone 5.....................$ 16.12           12.85

  DISTRIBUTION WORK - The construction, installation, treating
  and reconditioning of distribution pipelines transporting
  coal, oil, gas or other similar materials, vapors or
  liquids, including pipelines within private property
  boundaries, up to and including the meter settings on
  residential, commercial, industrial, institutional, private
  and public structures. All work covering pumping stations
  and tank farms not covered by the Building Trades
  Agreement. Other distribution lines with the exception of
  sewer, water and cable television are included.

  Underground Duct Layer Pay: $.40 per hour above the base pay
  rate.

Zone 1 - Macomb, Oakland and Wayne
Zone 2 - Monroe and Washtenaw
  Zone 3 - Bay, Genesee, Lapeer, Midland, Saginaw, Sanilac,
  Shiawassee and St. Clair
  Zone 4 - Alger, Baraga, Chippewa, Delta, Dickinson, Gogebic,
  Houghton, Iron, Keweenaw, Luce, Mackinac, Marquette,
  Menominee, Ontonagon and Schoolcraft
Zone 5 - Remaining Counties in Michigan

----------------------------------------------------------------
 PAIN0022-002 07/01/2008

HILLSDALE, JACKSON AND LENAWEE COUNTIES; LIVINGSTON COUNTY
(east of the eastern city limits of Howell, not including the
city of Howell, north to the Genesee County line and south to
the Washtenaw County line); MACOMB, MONROE, OAKLAND, WASHTENAW
AND WAYNE COUNTIES:


                                  Rates          Fringes

PAINTER.........................$ 25.06           14.75

  FOOTNOTES: For all spray work and journeyman rigging for
  spray work, also blowing off, $0.80 per hour additional
  (applies only to workers doing rigging for spray work on
  off the floor work. Does not include setting up or moving
  rigging on floor surfaces, nor does it apply to workers
  engaged in covering up or tending spray equipment. For all
  sandblasting and spray work performed on highway bridges,
  overpasses, tanks or steel, $0.80 per hour additional. For
  all brushing, cleaning and other preparatory work (other
  than spraying or steeplejack work) at scaffold heights of
  fifty (50) feet from the ground or higher, $0.50 per hour
  additional. For all preparatorial work and painting
  performed on open steel under forty (40) feet when no
  scaffolding is involved, $0.50 per hour additional. For all
  swing stage work-window jacks and window belts-exterior and
  interior, $0.50 per hour additional. For all spray work and
  sandblaster work to a scaffold height of forty (40) feet
  above the floor level, $0.80 per hour additional. For all
  preparatorial work and painting on all highway bridges or
  overpasses up to forty (40) feet in height, $0.50 per hour
  additional. For all steeplejack work performed where the
  elevation is forty (40) feet or more, $1.25 per hour
```

additional.

PAIN0312-001 06/01/2018

EXCLUDES: ALLEGAN COUNTY (Townships of Dorr, Fillmore, Heath, Hopkins, Laketown, Leighton, Manlius, Monterey, Overisel, Salem, Saugatuck and Wayland); INCLUDES: Barry, Berrien, Branch, Calhoun, Cass, Hillsdale, Kalamazoo, St. Joseph, Van Buren

	Rates	Fringes
PAINTER		
Brush and roller	$ 23.74	13.35
Spray, Sandblast, Sign Painting	$ 24.94	13.35

PAIN0845-003 05/10/2018

CLINTON COUNTY; EATON COUNTY (does not include the townships of Bellevue and Olivet); INGHAM COUNTY; IONIA COUNTY (east of Hwy. M 66); LIVINGSTON COUNTY (west of the eastern city limits of Howell, including the city of Howell, north to the Genesee County line and south to the Washtenaw County line); AND SHIAWASSEE COUNTY (Townships of Bennington, Laingsbury and Perry):

	Rates	Fringes
PAINTER	$ 25.49	13.74

PAIN0845-015 05/10/2018

MUSKEGON COUNTY; NEWAYGO COUNTY (except the Townships of Barton, Big Prairie, Brooks, Croton, Ensley, Everett, Goodwell, Grant, Home, Monroe, Norwich and Wilcox); OCEANA COUNTY; OTTAWA COUNTY (except the townships of Allendale, Blendone, Chester, Georgetown, Holland, Jamestown, Olive, Park, Polkton, Port Sheldon, Tallmadge, Wright and Zeeland):

	Rates	Fringes
PAINTER	$ 25.49	13.74

PAIN0845-018 05/10/2018

ALLEGAN COUNTY (Townships of Dorr, Fillmore, Heath, Hopkins, Laketown, Leighton, Manlius, Monterey, Overisel, Salem, Saugatuck and Wayland); IONIA COUNTY (west of Hwy. M-66); KENT, MECOSTA AND MONTCALM COUNTIES; NEWAYGO COUNTY (Townships of Barton, Big Prairie, Brooks, Croton, Ensley, Everett, Goodwell, Grant, Home, Monroe, Norwich and Wilcox); OSCEOLA COUNTY (south of Hwy. #10); OTTAWA COUNTY (Townships of Allendale, Blendone, Chester, Georgetown, Holland, Jamestown, Olive, Park, Polkton, Port Sheldon, Tallmadge, Wright and Zeeland):

	Rates	Fringes
PAINTER	$ 25.49	13.74

FOOTNOTES: Lead abatement work: $1.00 per hour additional.

PAIN1011-003 06/03/2018

ALGER, BARAGA, CHIPPEWA, DELTA, DICKINSON, GOGEBIC, HOUGHTON, IRON, KEWEENAW, LUCE, MACKINAC, MARQUETTE, MENOMINEE, ONTONAGON AND SCHOOLCRAFT COUNTIES:

	Rates	Fringes
PAINTER	$ 25.31	12.78

FOOTNOTES: High pay (bridges, overpasses, watertower): 30 to 80 ft.: $.65 per hour additional. 80 ft. and over: $1.30 per hour additional.

PAIN1474-002 06/01/2010

HURON COUNTY; LAPEER COUNTY (east of Hwy. M-53); ST. CLAIR, SANILAC AND TUSCOLA COUNTIES:

	Rates	Fringes
PAINTER	$ 23.79	12.02

FOOTNOTES: Lead abatement work: $1.00 per hour additional. Work with any hazardous material: $1.00 per hour additional. Sandblasting, steam cleaning and acid cleaning: $1.00 per hour additional. Ladder work at or above 40 ft., scaffold work at or above 40 ft., swing stage, boatswain chair, window jacks and all work performed over a falling height of 40 ft.: $1.00 per hour additional. Spray gun work, pick pullers and those handling needles, blowing off by air pressure, and any person rigging (setting up and moving off the ground): $1.00 per hour additional. Steeplejack, tanks, gas holders, stacks, flag poles, radio towers and beacons, power line towers, bridges, etc.: $1.00 per hour additional, paid from the ground up.

PAIN1803-003 06/01/2018

ALCONA, ALPENA, ANTRIM, ARENAC, BAY, BENZIE, CHARLEVOIX, CHEBOYGAN, CLARE, CRAWFORD, EMMET, GLADWIN, GRAND TRAVERSE, GRATIOT, IOSCO, ISABELLA, KALKASKA, LAKE, LEELANAU, MANISTEE, MASON, MIDLAND, MISSAUKEE, MONTMORENCY AND OGEMAW COUNTIES; OSCEOLA COUNTY (north of Hwy. #10); OSCODA, OTSEGO, PRESQUE ISLE, ROSCOMMON, SAGINAW AND WEXFORD COUNTIES:

	Rates	Fringes
PAINTER		
Work performed on water, bridges over water or moving traffic, radio and powerline towers, elevated tanks, steeples, smoke stacks over 40 ft. of falling heights, recovery of lead-based paints and any work associated with		

```
      industrial plants, except
      maintenance of industrial

      plants.....................$ 24.92           14.68
      All other work, including
      maintenance of industrial
      plant......................$ 24.92           14.68

  FOOTNOTES: Spray painting, sandblasting, blowdown associated
  with spraying and blasting, water blasting and work
  involving a swing stage, boatswain chair or spider: $1.00
  per hour additional. All work performed inside tanks,
  vessels, tank trailers, railroad cars, sewers, smoke
  stacks, boilers or other spaces having limited egress not
  including buildings, opentop tanks, pits, etc.: $1.25 per
  hour additional.

-----------------------------------------------------------------
 PLAS0514-001 06/01/2018

ZONE 1: GENESEE, LIVINGSTON, MACOMB, MONROE, OAKLAND, SAGINAW,
WASHTENAW AND WAYNE COUNTIES

ZONE 2: ALCONA, ALGER, ALLEGAN, ALPENA, ANTRIM, ARENAC, BARAGA,
BARRY, BAY, BENZIE, BERRIEN, BRANCH, CALHOUN, CASS, CHARLEVOIX,
CHEBOYGAN, CHIPPEWA, CLARE, CLINTON, CRAWFORD, DELTA,
DICKINSON, EATON, EMMET, GLADWIN, GOGEBIC, GRAND TRAVERSE,
GRATIOT, HILLSDALE, HOUGHTON, HURON, INGHAM,  IONIA, IOSCO,
IRON, ISABELLA, JACKSON, KALAMAZOO, KALKASKA, KENT, KEWEENAW,
LAKE, LAPEER, LEELANAU, LENAWEE, LUCE, MACKINAC, MANISTEE,
MARQUETTE, MASON, MECOSTA, MENOMINEE, MIDLAND, MISSAUKEE,
MONTCALM, MONTMORENCY, MUSKEGON, NEWAYGO, OCEANA, OGEMAW,
ONTONAGON, OSCEOLA, OSCODA, OTSEGO, OTTAWA, PRESQUE ISLE,
ROSCOMMON, SANILAC, SCHOOLCRAFT, SHIAWASSEE, ST. CLAIR, ST.
JOSEPH, TUSCOLA, VAN BUREN  AND WEXFORD COUNTIES


                                  Rates          Fringes

CEMENT MASON/CONCRETE FINISHER
     ZONE 1.....................$ 31.47           13.81
     ZONE 2.....................$ 29.97           13.81
-----------------------------------------------------------------
 PLUM0190-003 05/01/2015

ALCONA, ALGER, ALLEGAN, ALPENA, ANTRIM, ARENAC, BARAGA, BARRY,
BAY, BENZIE, BERRIEN, BRANCH, CALHOUN, CASS, CHARLEVOIX,
CHEBOYGAN, CHIPPEWA, CLARE, CLINTON, CRAWFORD, DELTA,
DICKINSON, EATON, EMMET, GENESEE, GLADWIN, GOGEBIC, GRAND
TRAVERSE, GRATIOT, HILLSDALE, HOUGHTON, HURON, INGHAM, IONIA,
IOSCO, IRON, ISABELLA, JACKSON, KALAMAZOO, KALKASKA, KENT,
KEWEENAW, LAKE, LAPEER,  LEELANAU, LENAWEE, LIVINGSTON, LUCE,
MACKINAC, MACOMB, MANISTEE, MARQUETTE, MASON, MECOSTA,
MENOMINEE, MIDLAND, MISSAUKEE, MONTCALM, MONTMORENCY, MONROE,
MUSKEGON, NEWAYGO, OAKLAND, OCEANA, OGEMAW, ONTONAGON, OSCEOLA,
OSCODA, OTSEGO, OTTAWA, PRESQUE ISLE, ROSCOMMON, SAGINAW, ST.
CLARE, ST. JOSEPH, SANILAC, SCHOOLCRAFT, SHIAWASSEE, TUSCOLA,
VAN BUREN, WASHTENAW, WAYNE AND WEXFORD COUNTIES


                                  Rates          Fringes

Plumber/Pipefitter - gas
distribution pipeline:
     Welding in conjunction
```

```
     with gas distribution
     pipeline work...............$ 33.03           20.19
     All other work:.............$ 24.19           12.28
-----------------------------------------------------------------
 TEAM0007-004 06/01/2018

AREA 1: ALCONA, ALGER, ALLEGAN, ALPENA, ANTRIM, ARENAC, BARAGA,
BARRY, BAY, BENZIE, BERRIEN, BRANCH, CALHOUN, CASS, CHARLEVOIX,
CHEBOYGAN, CHIPPEWA, CLARE, CLINTON, CRAWFORD, DELTA,
DICKINSON, EATON, EMMET, GLADWIN, GOGEBIC, GRAND TRAVERSE,
GRATIOT, HILLSDALE, HOUGHTON, HURON, INGHAM,  IONIA, IOSCO,
IRON, ISABELLA, JACKSON, KALAMAZOO, KALKASKA, KENT, KEWEENAW,
LAKE, LAPEER, LEELANAU, LENAWEE, LUCE, MACKINAC, MANISTEE,
MARQUETTE, MASON, MECOSTA, MENOMINEE, MIDLAND, MISSAUKEE,
MONTCALM, MONTMORENCY, MUSKEGON, NEWAYGO, OCEANA, OGEMAW,
ONTONAGON, OSCEOLA, OSCODA, OTSEGO, OTTAWA, PRESQUE ISLE,
ROSCOMMON, SAGINAW, SANILAC, SCHOOLCRAFT, SHIAWASSEE, ST.
CLAIR, ST. JOSEPH, TUSCOLA, VAN BUREN  AND WEXFORD COUNTIES

AREA 2: GENESEE, LIVINGSTON, MACOMB, MONROE, OAKLAND, WASHTENAW
AND WAYNE COUNTIES


                                   Rates          Fringes

TRUCK DRIVER
     AREA 1
      Euclids, double bottoms
      and lowboys................$ 26.55        .50 + a+b
      Trucks under 8 cu. yds.....$ 26.30        .50 + a+b
      Trucks, 8 cu. yds. and
      over.......................$ 26.40        .50 + a+b
     AREA 2
      Euclids, double bottomms
      and lowboys................$ 24.895       .50 + a+b
      Euclids, double bottoms
      and lowboys................$ 26.65        .50 + a+b
      Trucks under 8 cu. yds.....$ 26.40        .50 + a+b
      Trucks, 8 cu. yds. and
      over.......................$ 26.50        .50 + a+b

Footnote:
a. $446.70 per week
b. $67.00 daily
-----------------------------------------------------------------
 TEAM0247-004 04/01/2013

AREA 1: ALCONA, ALGER, ALLEGAN, ALPENA, ANTRIM, ARENAC, BARAGA,
BARRY, BAY, BENZIE, BERRIEN, BRANCH, CALHOUN, CASS, CHARLEVOIX,
CHEBOYGAN, CHIPPEWA, CLARE, CLINTON, CRAWFORD, DELTA,
DICKINSON, EATON, EMMET, GLADWIN, GOGEBIC, GRAND TRAVERSE,
GRATIOT, HILLSDALE, HOUGHTON, HURON, INGHAM,  IONIA, IOSCO,
IRON, ISABELLA, JACKSON, KALAMAZOO, KALKASKA, KENT, KEWEENAW,
LAKE, LAPEER, LEELANAU, LENAWEE, LUCE, MACKINAC, MANISTEE,
MARQUETTE, MASON, MECOSTA, MENOMINEE, MIDLAND, MISSAUKEE,
MONTCALM, MONTMORENCY, MUSKEGON, NEWAYGO, OCEANA, OGEMAW,
ONTONAGON, OSCEOLA, OSCODA, OTSEGO, OTTAWA, PRESQUE ISLE,
ROSCOMMON, SANILAC, SCHOOLCRAFT, SHIAWASSEE, SAGINAW, ST.
CLAIR, ST. JOSEPH, TUSCOLA, VAN BUREN  AND WEXFORD COUNTIES

AREA 2: GENESEE, LIVINGSTON,  MACOMB, MONROE, OAKLAND,
WASHTENAW AND WAYNE COUNTIES


                                   Rates          Fringes
```

```
Sign Installer
     AREA 1
      GROUP 1...................$ 21.78           11.83
      GROUP 2...................$ 25.27          11.8375
     AREA 2
      GROUP 1...................$ 22.03           11.83
      GROUP 2...................$ 25.02          11.8375

FOOTNOTE:

a. $132.70 per week, plus $17.80 per day.


SIGN INSTALLER CLASSIFICATIONS:

  GROUP 1: performs all necessary labor and uses all tools
  required to construct and set concrete forms required in
  the installation of highway and street signs

  GROUP 2: performs all miscellaneous labor, uses all hand and
  power tools, and operates all other equipment, mobile or
  otherwise, required for the installation of highway and
  street signs

----------------------------------------------------------------
 TEAM0247-010 04/01/2018

AREA 1: LAPEER AND SHIAWASSEE COUNTIES

AREA 2: GENESEE, MACOMB, MONROE, OAKLAND, ST. CLAIR, WASHTENAW
AND WAYNE COUNTIES


                                  Rates          Fringes

TRUCK DRIVER (Underground
construction)
     AREA 1
      GROUP 1...................$ 23.82           19.04
      GROUP 2...................$ 23.91           19.04
      GROUP 3...................$ 24.12           19.04
     AREA 2
      GROUP 1...................$ 24.12           19.04
      GROUP 2...................$ 24.26           19.04
      GROUP 3...................$ 24.45           19.04

  PAID HOLIDAYS: New Year's Day, Memorial Day, Fourth of July,
  Labor Day, Thanksgiving Day and Christmas Day.

  SCOPE OF WORK: Excavation, site preparation, land balancing,
  grading, sewers, utilities and improvements; also including
  but not limited to, tunnels, underground piping, retention,
  oxidation, flocculation facilities, conduits, general
  excavation and steel sheeting for underground construction.
  Underground construction work shall not include any
  structural modifications, alterations, additions and
  repairs to buildings or highway work, including roads,
  streets, bridge construction and parking lots or steel
  erection.

TRUCK DRIVER CLASSIFICATIONS

  GROUP 1: Truck driver on all trucks (EXCEPT dump trucks of 8
  cubic yards capacity or over, pole trailers, semis, low
```

boys, Euclid, double bottom and fuel trucks)

GROUP 2: Truck driver on dump trucks of 8 cubic yards capacity or over, pole trailers, semis and fuel trucks

GROUP 3: Truck driver on low boy, Euclid and double bottom

SUMI2002-001 05/01/2002

	Rates	Fringes
Flag Person	$ 10.10	0.00
LINE PROTECTOR (ZONE 1: GENESEE, MACOMB, MONROE, OAKLAND, WASHTENAW AND WAYNE)	$ 18.98	12.85
LINE PROTECTOR (ZONE 2: STATEWIDE (EXCLUDING GENESEE, MACOMB, MONROE, OAKLAND, WASHTENAW AND WAYNE)	$ 17.14	12.85
Pavement Marking Machine (ZONE 1: GENESEE, MACOMB, MONROE, OAKLAND, WASHTENAW AND WAYNE COUNTIES) Group 1	$ 25.74	12.85
Pavement Marking Machine (ZONE 1: GENESEE, MACOMB, MONROE, OAKLAND, WASHTENAW AND WAYNE) Group 2	$ 23.17	12.85
Pavement Marking Machine (ZONE 2: STATEWIDE (EXCLUDING GENESEE, MACOMB, MONROE, OAKLAND, WASHTENAW AND WAYNE COUNTIES) Group 1	$ 23.67	12.85
Pavement Marking Machine (ZONE 2: STATEWIDE (EXCLUDING GENESEE, MACOMB, MONROE, OAKLAND, WASHTENAW AND WAYNE) Group 2	$ 21.30	12.85

WORK CLASSIFICATIONS:

PAVEMENT MARKER GROUP 1: Drives or operates a truck mounted striper, grinder, blaster, groover, or thermoplastic melter for the placement or removal of temporary or permanent pavement markings or markers.

PAVEMENT MARKER GROUP 2: Performs all functions involved for the placement or removal of temporary or permanent pavement markings or markers not covered by the classification of Pavement Marker Group 1 or Line Protector.

LINE PROTECTOR: Performs all operations for the protection or removal of temporary or permanent pavement markings or markers in a moving convoy operation not performed by the classification of Pavement Marker Group 1. A moving convoy operation is comprised of only Pavement Markers Group 1 and

Line Protectors.

WELDERS - Receive rate prescribed for craft performing operation to which welding is incidental.

==========

Note: Executive Order (EO) 13706, Establishing Paid Sick Leave for Federal Contractors applies to all contracts subject to the Davis-Bacon Act for which the contract is awarded (and any solicitation was issued) on or after January 1, 2017. If this contract is covered by the EO, the contractor must provide employees with 1 hour of paid sick leave for every 30 hours they work, up to 56 hours of paid sick leave each year. Employees must be permitted to use paid sick leave for their own illness, injury or other health-related needs, including preventive care; to assist a family member (or person who is like family to the employee) who is ill, injured, or has other health-related needs, including preventive care; or for reasons resulting from, or to assist a family member (or person who is like family to the employee) who is a victim of, domestic violence, sexual assault, or stalking. Additional information on contractor requirements and worker protections under the EO is available at www.dol.gov/whd/govcontracts.

Unlisted classifications needed for work not included within the scope of the classifications listed may be added after award only as provided in the labor standards contract clauses (29CFR 5.5 (a) (1) (ii)).

The body of each wage determination lists the classification and wage rates that have been found to be prevailing for the cited type(s) of construction in the area covered by the wage determination. The classifications are listed in alphabetical order of "identifiers" that indicate whether the particular rate is a union rate (current union negotiated rate for local), a survey rate (weighted average rate) or a union average rate (weighted union average rate).

Union Rate Identifiers

A four letter classification abbreviation identifier enclosed in dotted lines beginning with characters other than "SU" or "UAVG" denotes that the union classification and rate were prevailing for that classification in the survey. Example: PLUM0198-005 07/01/2014. PLUM is an abbreviation identifier of the union which prevailed in the survey for this classification, which in this example would be Plumbers. 0198 indicates the local union number or district council number where applicable, i.e., Plumbers Local 0198. The next number, 005 in the example, is an internal number used in processing the wage determination. 07/01/2014 is the effective date of the most current negotiated rate, which in this example is July 1, 2014.

Union prevailing wage rates are updated to reflect all rate changes in the collective bargaining agreement (CBA) governing this classification and rate.

Survey Rate Identifiers

Classifications listed under the "SU" identifier indicate that no one rate prevailed for this classification in the survey and the published rate is derived by computing a weighted average rate based on all the rates reported in the survey for that classification. As this weighted average rate includes all rates reported in the survey, it may include both union and non-union rates. Example: SULA2012-007 5/13/2014. SU indicates the rates are survey rates based on a weighted average calculation of rates and are not majority rates. LA indicates the State of Louisiana. 2012 is the year of survey on which these classifications and rates are based. The next number, 007 in the example, is an internal number used in producing the wage determination. 5/13/2014 indicates the survey completion date for the classifications and rates under that identifier.

Survey wage rates are not updated and remain in effect until a new survey is conducted.

Union Average Rate Identifiers

Classification(s) listed under the UAVG identifier indicate that no single majority rate prevailed for those classifications; however, 100% of the data reported for the classifications was union data. EXAMPLE: UAVG-OH-0010 08/29/2014. UAVG indicates that the rate is a weighted union average rate. OH indicates the state. The next number, 0010 in the example, is an internal number used in producing the wage determination. 08/29/2014 indicates the survey completion date for the classifications and rates under that identifier.

A UAVG rate will be updated once a year, usually in January of each year, to reflect a weighted average of the current negotiated/CBA rate of the union locals from which the rate is based.

WAGE DETERMINATION APPEALS PROCESS

1.) Has there been an initial decision in the matter? This can be:

* an existing published wage determination
* a survey underlying a wage determination
* a Wage and Hour Division letter setting forth a position on a wage determination matter
* a conformance (additional classification and rate) ruling

On survey related matters, initial contact, including requests for summaries of surveys, should be with the Wage and Hour Regional Office for the area in which the survey was conducted because those Regional Offices have responsibility for the Davis-Bacon survey program. If the response from this initial contact is not satisfactory, then the process described in 2.) and 3.) should be followed.

With regard to any other matter not yet ripe for the formal process described here, initial contact should be with the Branch of Construction Wage Determinations. Write to:

Branch of Construction Wage Determinations

Wage and Hour Division
U.S. Department of Labor
200 Constitution Avenue, N.W.
Washington, DC 20210

2.) If the answer to the question in 1.) is yes, then an interested party (those affected by the action) can request review and reconsideration from the Wage and Hour Administrator (See 29 CFR Part 1.8 and 29 CFR Part 7). Write to:

Wage and Hour Administrator
U.S. Department of Labor
200 Constitution Avenue, N.W.
Washington, DC 20210

The request should be accompanied by a full statement of the interested party's position and by any information (wage payment data, project description, area practice material, etc.) that the requestor considers relevant to the issue.

3.) If the decision of the Administrator is not favorable, an interested party may appeal directly to the Administrative Review Board (formerly the Wage Appeals Board). Write to:

Administrative Review Board
U.S. Department of Labor
200 Constitution Avenue, N.W.
Washington, DC 20210

4.) All decisions by the Administrative Review Board are final.

==========

END OF GENERAL DECISION

General Decision Number: MI190067 01/04/2019 MI67

Superseded General Decision Number: MI20180067

State: Michigan

Construction Type: Heavy

County: Muskegon County in Michigan.

Heavy, Includes Water, Sewer Lines and Excavation (Excludes Hazardous Waste Removal; Coal, Oil, Gas, Duct and other similar Pipeline Construction)

Note: Under Executive Order (EO) 13658, an hourly minimum wage of $10.60 for calendar year 2019 applies to all contracts subject to the Davis-Bacon Act for which the contract is awarded (and any solicitation was issued) on or after January 1, 2015. If this contract is covered by the EO, the contractor must pay all workers in any classification listed on this wage determination at least $10.60 per hour (or the applicable wage rate listed on this wage determination, if it is higher) for all hours spent performing on the contract in calendar year 2019. If this contract is covered by the EO and a classification considered necessary for performance of work on the contract does not appear on this wage determination, the contractor must pay workers in that classification at least the wage rate determined through the conformance process set forth in 29 CFR 5.5(a)(1)(ii) (or the EO minimum wage rate, if it is higher than the conformed wage rate). The EO minimum wage rate will be adjusted annually. Please note that this EO applies to the above-mentioned types of contracts entered into by the federal government that are subject to the Davis-Bacon Act itself, but it does not apply to contracts subject only to the Davis-Bacon Related Acts, including those set forth at 29 CFR 5.1(a)(2)-(60). Additional information on contractor requirements and worker protections under the EO is available at www.dol.gov/whd/govcontracts.

Modification Number	Publication Date
0	01/04/2019

CARP0100-009 06/01/2018

	Rates	Fringes
CARPENTER, Includes Form Work....	$ 22.11	19.54

ELEC0275-001 06/01/2018

	Rates	Fringes
ELECTRICIAN.....	$ 30.58	19.74

---

* ENGI0325-016 09/01/2018

POWER EQUIPMENT OPERATORS: Underground Construction (Including Sewer)

	Rates	Fringes

POWER EQUIPMENT OPERATOR
GROUP 1.....$ 30.82 23.85
GROUP 2.....$ 25.93 23.85
GROUP 3.....$ 25.43 23.85
GROUP 4.....$ 25.15 23.85

POWER EQUIPMENT OPERATOR CLASSIFICATIONS

GROUP 1: Boring Machine, Roller, Scraper, Trencher (over 8 ft. digging capacity)

GROUP 2: Trencher (8-ft digging capacity and smaller)

GROUP 3: Boom Truck (non-swinging, non- powered type boom)

GROUP 4: Broom/ Sweeper, Fork Truck, Tractor, Bobcat/ Skid Steer /Skid Loader

---

ENGI0326-009 06/01/2018

EXCLUDES UNDERGROUND CONSTRUCTION

	Rates	Fringes
OPERATOR: Power Equipment		
GROUP 1	$ 32.73	23.85
GROUP 2	$ 31.02	23.85
GROUP 3	$ 31.02	23.85
GROUP 4	$ 25.16	23.85

PAID HOLIDAYS: New Year's Day, Memorial Day, Fourth of July, Labor Day, Thanksgiving Day and Christmas Day.

Swing Boom Truck Operator over 12 tons-$.50 per hour

POWER EQUIPMENT OPERATOR CLASSIFICATIONS

GROUP 1: Boring Machine; Roller; Scraper; Tractor; Trencher

GROUP 2: Bobcat/Skid Loader; Broom/Sweeper; Fork Truck (over 20' lift)

GROUP 3: Boom truck (non-swinging)

GROUP 4: Fork Truck (20' lift and under for masonry work)

IRON0340-004 06/19/2017

	Rates	Fringes
IRONWORKER, STRUCTURAL AND REINFORCING	$ 24.43	24.67

LABO0334-006 09/01/2018

SCOPE OF WORK:
OPEN CUT CONSTRUCTION: Excavation of earth and sewer, utilities, and improvements, including underground piping/conduit (including inspection, cleaning, restoration, and relining)

```
                                  Rates          Fringes

LABORER
     (1) Common or General.......$ 20.97           12.85
     (2) Mason Tender-
     Cement/Concrete.............$ 21.10           12.85
     (4) Grade Checker...........$ 21.28           12.85
----------------------------------------------------------------
 LABO0355-019 06/01/2018

EXCLUDES OPEN CUT CONSTRUCTION

                                  Rates          Fringes

LABORER
     Common or General; Grade
     Checker; Mason Tender -
     Cement/Concrete.............$ 22.48           12.85
----------------------------------------------------------------
 PAIN0845-017 05/21/2014

                                  Rates          Fringes

PAINTER:  Brush, Roller and
Spray...........................$ 21.89           11.85
----------------------------------------------------------------
 PLAS0016-017 04/01/2014

                                  Rates          Fringes

CEMENT MASON/CONCRETE FINISHER...$ 21.15           12.78
----------------------------------------------------------------
 PLUM0174-003 07/01/2018

                                  Rates          Fringes

PLUMBER.........................$ 33.41           22.52
----------------------------------------------------------------
 TEAM0007-010 06/01/2018

                                  Rates          Fringes

TRUCK DRIVER
     Lowboy/Semi-Trailer Truck...$ 26.65        .50 + a+b

FOOTNOTE:
a.  $446.70 per week.
b.  $67.00 daily.
----------------------------------------------------------------
  SUMI2010-065 11/09/2010

                                  Rates          Fringes

LABORER:  Landscape.............$ 12.21            1.96

LABORER:  Pipelayer.............$ 15.54            4.16

OPERATOR:  Backhoe/Excavator.....$ 20.94            8.15

OPERATOR:  Bulldozer............$ 20.48            6.14

OPERATOR:  Crane................$ 18.50            5.10

OPERATOR:  Grader/Blade.........$ 16.64            0.00
```

OPERATOR: Loader.....$ 17.52 5.51

TRUCK DRIVER: Dump Truck.....$ 17.00 5.71

TRUCK DRIVER: Off the Road
Truck.....$ 20.82 3.69

TRUCK DRIVER: Tractor Haul
Truck.....$ 16.50 4.89

WELDERS - Receive rate prescribed for craft performing operation to which welding is incidental.

==========

Note: Executive Order (EO) 13706, Establishing Paid Sick Leave for Federal Contractors applies to all contracts subject to the Davis-Bacon Act for which the contract is awarded (and any solicitation was issued) on or after January 1, 2017. If this contract is covered by the EO, the contractor must provide employees with 1 hour of paid sick leave for every 30 hours they work, up to 56 hours of paid sick leave each year. Employees must be permitted to use paid sick leave for their own illness, injury or other health-related needs, including preventive care; to assist a family member (or person who is like family to the employee) who is ill, injured, or has other health-related needs, including preventive care; or for reasons resulting from, or to assist a family member (or person who is like family to the employee) who is a victim of, domestic violence, sexual assault, or stalking. Additional information on contractor requirements and worker protections under the EO is available at www.dol.gov/whd/govcontracts.

Unlisted classifications needed for work not included within the scope of the classifications listed may be added after award only as provided in the labor standards contract clauses (29CFR 5.5 (a) (1) (ii)).

The body of each wage determination lists the classification and wage rates that have been found to be prevailing for the cited type(s) of construction in the area covered by the wage determination. The classifications are listed in alphabetical order of "identifiers" that indicate whether the particular rate is a union rate (current union negotiated rate for local), a survey rate (weighted average rate) or a union average rate (weighted union average rate).

Union Rate Identifiers

A four letter classification abbreviation identifier enclosed in dotted lines beginning with characters other than "SU" or "UAVG" denotes that the union classification and rate were prevailing for that classification in the survey. Example: PLUM0198-005 07/01/2014. PLUM is an abbreviation identifier of the union which prevailed in the survey for this classification, which in this example would be Plumbers. 0198 indicates the local union number or district council number where applicable, i.e., Plumbers Local 0198. The next number, 005 in the example, is an internal number used in processing

the wage determination. 07/01/2014 is the effective date of the most current negotiated rate, which in this example is July 1, 2014.

Union prevailing wage rates are updated to reflect all rate changes in the collective bargaining agreement (CBA) governing this classification and rate.

Survey Rate Identifiers

Classifications listed under the "SU" identifier indicate that no one rate prevailed for this classification in the survey and the published rate is derived by computing a weighted average rate based on all the rates reported in the survey for that classification. As this weighted average rate includes all rates reported in the survey, it may include both union and non-union rates. Example: SULA2012-007 5/13/2014. SU indicates the rates are survey rates based on a weighted average calculation of rates and are not majority rates. LA indicates the State of Louisiana. 2012 is the year of survey on which these classifications and rates are based. The next number, 007 in the example, is an internal number used in producing the wage determination. 5/13/2014 indicates the survey completion date for the classifications and rates under that identifier.

Survey wage rates are not updated and remain in effect until a new survey is conducted.

Union Average Rate Identifiers

Classification(s) listed under the UAVG identifier indicate that no single majority rate prevailed for those classifications; however, 100% of the data reported for the classifications was union data. EXAMPLE: UAVG-OH-0010 08/29/2014. UAVG indicates that the rate is a weighted union average rate. OH indicates the state. The next number, 0010 in the example, is an internal number used in producing the wage determination. 08/29/2014 indicates the survey completion date for the classifications and rates under that identifier.

A UAVG rate will be updated once a year, usually in January of each year, to reflect a weighted average of the current negotiated/CBA rate of the union locals from which the rate is based.

WAGE DETERMINATION APPEALS PROCESS

1.) Has there been an initial decision in the matter? This can be:

* an existing published wage determination
* a survey underlying a wage determination
* a Wage and Hour Division letter setting forth a position on a wage determination matter
* a conformance (additional classification and rate) ruling

On survey related matters, initial contact, including requests for summaries of surveys, should be with the Wage and Hour Regional Office for the area in which the survey was conducted because those Regional Offices have responsibility for the Davis-Bacon survey program. If the response from this initial

contact is not satisfactory, then the process described in 2.) and 3.) should be followed.

With regard to any other matter not yet ripe for the formal process described here, initial contact should be with the Branch of Construction Wage Determinations. Write to:

Branch of Construction Wage Determinations
Wage and Hour Division
U.S. Department of Labor
200 Constitution Avenue, N.W.
Washington, DC 20210

2.) If the answer to the question in 1.) is yes, then an interested party (those affected by the action) can request review and reconsideration from the Wage and Hour Administrator (See 29 CFR Part 1.8 and 29 CFR Part 7). Write to:

Wage and Hour Administrator
U.S. Department of Labor
200 Constitution Avenue, N.W.
Washington, DC 20210

The request should be accompanied by a full statement of the interested party's position and by any information (wage payment data, project description, area practice material, etc.) that the requestor considers relevant to the issue.

3.) If the decision of the Administrator is not favorable, an interested party may appeal directly to the Administrative Review Board (formerly the Wage Appeals Board). Write to:

Administrative Review Board
U.S. Department of Labor
200 Constitution Avenue, N.W.
Washington, DC 20210

4.) All decisions by the Administrative Review Board are final.

==========

END OF GENERAL DECISION

29 CFR Part 5 – Labor Standards Provisions for Federally Assisted Projects

§ 5.5 Contract provisions and related matters.

(a) The Agency head shall cause or require the contracting officer to insert in full in any contract in excess of $2,000 which is entered into for the actual construction, alteration and/or repair, including painting and decorating, of a public building or public work, or building or work financed in whole or in part from Federal funds or in accordance with guarantees of a Federal agency or financed from funds obtained by pledge of any contract of a Federal agency to make a loan, grant or annual contribution (except where a different meaning is expressly indicated), and which is subject to the labor standards provisions of any of the acts listed in Sec. 5.1, the following clauses (or any modifications thereof to meet the particular needs of the agency, *Provided*, That such modifications are first approved by the Department of Labor):

(1) *Minimum wages*. (i) All laborers and mechanics employed or working upon the site of the work (or under the United States Housing Act of 1937 or under the Housing Act of 1949 in the construction or development of the project), will be paid unconditionally and not less often than once a week, and without subsequent deduction or rebate on any account (except such payroll deductions as are permitted by regulations issued by the Secretary of Labor under the Copeland Act (29 CFR part 3)), the full amount of wages and bona fide fringe benefits (or cash equivalents thereof) due at time of payment computed at rates not less than those contained in the wage determination of the Secretary of Labor which is attached hereto and made a part hereof, regardless of any contractual relationship which may be alleged to exist between the contractor and such laborers and mechanics.

Contributions made or costs reasonably anticipated for bona fide fringe benefits under section 1(b)(2) of the Davis-Bacon Act on behalf of laborers or mechanics are considered wages paid to such laborers or mechanics, subject to the provisions of paragraph (a)(1)(iv) of this section; also, regular contributions made or costs incurred for more than a weekly period (but not less often than quarterly) under plans, funds, or programs which cover the particular weekly period, are deemed to be constructively made or incurred during such weekly period. Such laborers and mechanics shall be paid the appropriate wage rate and fringe benefits on the wage determination for the classification of work actually performed, without regard to skill, except as provided in Sec. 5.5(a)(4). Laborers or mechanics performing work in more than one classification may be compensated at the rate specified for each classification for the time actually worked therein: Provided, That the employer's payroll records accurately set forth the time spent in each classification in which work is performed. The wage determination (including any additional classification and wage rates conformed under paragraph (a)(1)(ii) of this section) and the Davis-Bacon poster (WH-1321) shall be posted at all times by the contractor and its subcontractors at the site of the work in a prominent and accessible place where it can be easily seen by the workers.

(ii)(A) The contracting officer shall require that any class of laborers or mechanics, including helpers, which is not listed in the wage determination and which is to be employed under the contract shall be classified in conformance with the wage determination. The contracting officer shall approve an additional classification and wage rate and fringe benefits therefore only when the following criteria have been met:

(1) The work to be performed by the classification requested is not performed by a classification in the wage determination; and

(2) The classification is utilized in the area by the construction industry; and

(3) The proposed wage rate, including any bona fide fringe benefits, bears a reasonable relationship to the wage rates contained in the wage determination.

(B) If the contractor and the laborers and mechanics to be employed in the classification (if known), or their representatives, and the contracting officer agree on the classification and wage rate (including the amount designated for fringe benefits where appropriate), a report of the action taken shall be sent by the contracting officer to the Administrator of the Wage and Hour Division, Employment Standards Administration, U.S. Department of Labor, Washington, DC 20210. The Administrator, or an authorized representative, will approve, modify, or disapprove every additional classification action within 30 days of receipt and so advise the contracting officer or will notify the contracting officer within the 30-day period that additional time is necessary.

(C) In the event the contractor, the laborers or mechanics to be employed in the classification or their representatives, and the contracting officer do not agree on the proposed classification and wage rate (including the amount designated for fringe benefits, where appropriate), the contracting officer shall refer the questions, including the views of all interested parties and the recommendation of the contracting officer, to the Administrator for determination. The Administrator, or an authorized representative, will issue a determination within 30 days of receipt and so advise the contracting officer or will notify the contracting officer within the 30-day period that additional time is necessary.

(D) The wage rate (including fringe benefits where appropriate) determined pursuant to paragraphs (a)(1)(ii) (B) or (C) of this section, shall be paid to all workers performing work in the classification under this contract from the first day on which work is performed in the classification.

(iii) Whenever the minimum wage rate prescribed in the contract for a class of laborers or mechanics includes a fringe benefit which is not expressed as an hourly rate, the contractor shall either pay the benefit as stated in the wage determination or shall pay another bona fide fringe benefit or an hourly cash equivalent thereof.

(iv) If the contractor does not make payments to a trustee or other third person, the contractor may consider as part of the wages of any laborer or mechanic the amount of any costs reasonably anticipated in providing bona fide fringe benefits under a plan or program, Provided, That the Secretary of Labor has found, upon the written request of the contractor, that the applicable standards of the Davis-Bacon Act have been met. The Secretary of Labor may require the contractor to set aside in a separate account assets for the meeting of obligations under the plan or program.

(2) *Withholding*. The (write in name of Federal Agency or the loan or grant recipient) shall upon its own action or upon written request of an authorized representative of the Department of Labor withhold or cause to be withheld from the contractor under this contract or any other Federal contract with the same prime contractor, or any other federally-assisted contract subject to Davis-Bacon prevailing wage requirements, which is held by the same prime contractor, so much of the accrued payments or advances as may be considered necessary to pay laborers and mechanics, including apprentices, trainees, and helpers, employed by the contractor or any subcontractor the full amount of wages required by the contract. In the event of failure to pay any laborer or mechanic, including any apprentice, trainee, or helper, employed or working on the site of the work (or under the United States Housing Act of 1937 or under the Housing Act of

1949 in the construction or development of the project), all or part of the wages required by the contract, the (Agency) may, after written notice to the contractor, sponsor, applicant, or owner, take such action as may be necessary to cause the suspension of any further payment, advance, or guarantee of funds until such violations have ceased.

(3) *Payrolls and basic records*. (i) Payrolls and basic records relating thereto shall be maintained by the contractor during the course of the work and preserved for a period of three years thereafter for all laborers and mechanics working at the site of the work (or under the United States Housing Act of 1937, or under the Housing Act of 1949, in the construction or development of the project). Such records shall contain the name, address, and social security number of each such worker, his or her correct classification, hourly rates of wages paid (including rates of contributions or costs anticipated for bona fide fringe benefits or cash equivalents thereof of the types described in section 1(b)(2)(B) of the Davis-Bacon Act), daily and weekly number of hours worked, deductions made and actual wages paid. Whenever the Secretary of Labor has found under 29 CFR 5.5(a)(1)(iv) that the wages of any laborer or mechanic include the amount of any costs reasonably anticipated in providing benefits under a plan or program described in section 1(b)(2)(B) of the Davis-Bacon Act, the contractor shall maintain records which show that the commitment to provide such benefits is enforceable, that the plan or program is financially responsible, and that the plan or program has been communicated in writing to the laborers or mechanics affected, and records which show the costs anticipated or the actual cost incurred in providing such benefits. Contractors employing apprentices or trainees under approved programs shall maintain written evidence of the registration of apprenticeship programs and certification of trainee programs, the registration of the apprentices and trainees, and the ratios and wage rates prescribed in the applicable programs.

(ii)(A) The contractor shall submit weekly for each week in which any contract work is performed a copy of all payrolls to the (write in name of appropriate federal agency) if the agency is a party to the contract, but if the agency is not such a party, the contractor will submit the payrolls to the applicant, sponsor, or owner, as the case may be, for transmission to the (write in name of agency). The payrolls submitted shall set out accurately and completely all of the information required to be maintained under 29 CFR 5.5(a)(3)(i), except that full social security numbers and home addresses shall not be included on weekly transmittals. Instead the payrolls shall only need to include an individually identifying number for each employee (*e.g*., the last four digits of the employee's social security number). The required weekly payroll information may be submitted in any form desired. Optional Form WH-347 is available for this purpose from the Wage and Hour Division Web site at *http://www.dol.gov/whd/forms/wh347.pdf* or its successor site. The prime contractor is responsible for the submission of copies of payrolls by all subcontractors. Contractors and subcontractors shall maintain the full social security number and current address of each covered worker, and shall provide them upon request to the (write in name of appropriate federal agency) if the agency is a party to the contract, but if the agency is not such a party, the contractor will submit them to the applicant, sponsor, or owner, as the case may be, for transmission to the (write in name of agency), the contractor, or the Wage and Hour Division of the Department of Labor for purposes of an investigation or audit of compliance with prevailing wage requirements. It is not a violation of this section for a prime contractor to require a subcontractor to provide addresses and social security numbers to the prime contractor for its own records, without weekly submission to the sponsoring government agency (or the applicant, sponsor, or owner).

(B) Each payroll submitted shall be accompanied by a ``Statement of Compliance,'' signed by the contractor or subcontractor or his or her agent who pays or supervises the payment of the persons employed under the contract and shall certify the following:

(1) That the payroll for the payroll period contains the information required to be provided under Sec. 5.5 (a)(3)(ii) of Regulations, 29 CFR part 5, the appropriate information is being maintained under Sec. 5.5 (a)(3)(i) of Regulations, 29 CFR part 5, and that such information is correct and complete;

(2) That each laborer or mechanic (including each helper, apprentice, and trainee) employed on the contract during the payroll period has been paid the full weekly wages earned, without rebate, either directly or indirectly, and that no deductions have been made either directly or indirectly from the full wages earned, other than permissible deductions as set forth in Regulations, 29 CFR part 3;

(3) That each laborer or mechanic has been paid not less than the applicable wage rates and fringe benefits or cash equivalents for the classification of work performed, as specified in the applicable wage determination incorporated into the contract.

(C) The weekly submission of a properly executed certification set forth on the reverse side of Optional Form WH-347 shall satisfy the requirement for submission of the ``Statement of Compliance'' required by paragraph (a)(3)(ii)(B) of this section.

(D) The falsification of any of the above certifications may subject the contractor or subcontractor to civil or criminal prosecution under section 1001 of title 18 and section 231 of title 31 of the United States Code.

(iii) The contractor or subcontractor shall make the records required under paragraph (a)(3)(i) of this section available for inspection, copying, or transcription by authorized representatives of the (write the name of the agency) or the Department of Labor, and shall permit such representatives to interview employees during working hours on the job. If the contractor or subcontractor fails to submit the required records or to make them available, the Federal agency may, after written notice to the contractor, sponsor, applicant, or owner, take such action as may be necessary to cause the suspension of any further payment, advance, or guarantee of funds. Furthermore, failure to submit the required records upon request or to make such records available may be grounds for debarment action pursuant to 29 CFR 5.12.

(4) *Apprentices and trainees*--(i) *Apprentices.* Apprentices will be permitted to work at less than the predetermined rate for the work they performed when they are employed pursuant to and individually registered in a bona fide apprenticeship program registered with the U.S. Department of Labor, Employment and Training Administration, Office of Apprenticeship Training, Employer and Labor Services, or with a State Apprenticeship Agency recognized by the Office, or if a person is employed in his or her first 90 days of probationary employment as an apprentice in such an apprenticeship program, who is not individually registered in the program, but who has been certified by the Office of Apprenticeship Training, Employer and Labor Services or a State Apprenticeship Agency (where appropriate) to be eligible for probationary employment as an apprentice. The allowable ratio of apprentices to journeymen on the job site in any craft classification shall not be greater than the ratio permitted to the contractor as to the entire work force under the registered program. Any worker listed on a payroll at an apprentice wage rate, who is not registered or otherwise employed as stated above, shall be paid not less than the applicable wage rate on the wage determination for the classification of work actually performed. In addition, any apprentice performing work on the job site in excess of the ratio permitted under the registered program shall be paid not less than the applicable wage rate on the wage determination for the work actually performed. Where a contractor is performing construction on a project in a locality other than that in which its

program is registered, the ratios and wage rates (expressed in percentages of the journeyman's hourly rate) specified in the contractor's or subcontractor's registered program shall be observed. Every apprentice must be paid at not less than the rate specified in the registered program for the apprentice's level of progress, expressed as a percentage of the journeymen hourly rate specified in the applicable wage determination. Apprentices shall be paid fringe benefits in accordance with the provisions of the apprenticeship program. If the apprenticeship program does not specify fringe benefits, apprentices must be paid the full amount of fringe benefits listed on the wage determination for the applicable classification. If the Administrator determines that a different practice prevails for the applicable apprentice classification, fringes shall be paid in accordance with that determination. In the event the Office of Apprenticeship Training, Employer and Labor Services, or a State Apprenticeship Agency recognized by the Office, withdraws approval of an apprenticeship program, the contractor will no longer be permitted to utilize apprentices at less than the applicable predetermined rate for the work performed until an acceptable program is approved.

(ii) *Trainees*. Except as provided in 29 CFR 5.16, trainees will not be permitted to work at less than the predetermined rate for the work performed unless they are employed pursuant to and individually registered in a program which has received prior approval, evidenced by formal certification by the U.S. Department of Labor, Employment and Training Administration. The ratio of trainees to journeymen on the job site shall not be greater than permitted under the plan approved by the Employment and Training Administration. Every trainee must be paid at not less than the rate specified in the approved program for the trainee's level of progress, expressed as a percentage of the journeyman hourly rate specified in the applicable wage determination. Trainees shall be paid fringe benefits in accordance with the provisions of the trainee program. If the trainee program does not mention fringe benefits, trainees shall be paid the full amount of fringe benefits listed on the wage determination unless the Administrator of the Wage and Hour Division determines that there is an apprenticeship program associated with the corresponding journeyman wage rate on the wage determination which provides for less than full fringe benefits for apprentices. Any employee listed on the payroll at a trainee rate who is not registered and participating in a training plan approved by the Employment and Training Administration shall be paid not less than the applicable wage rate on the wage determination for the classification of work actually performed. In addition, any trainee performing work on the job site in excess of the ratio permitted under the registered program shall be paid not less than the applicable wage rate on the wage determination for the work actually performed. In the event the Employment and Training Administration withdraws approval of a training program, the contractor will no longer be permitted to utilize trainees at less than the applicable predetermined rate for the work performed until an acceptable program is approved.

(iii) *Equal employment opportunity*. The utilization of apprentices, trainees and journeymen under this part shall be in conformity with the equal employment opportunity requirements of Executive Order 11246, as amended, and 29 CFR part 30.

(5) *Compliance with Copeland Act requirements*. The contractor shall comply with the requirements of 29 CFR part 3, which are incorporated by reference in this contract.

(6) *Subcontracts.* The contractor or subcontractor shall insert in any subcontracts the clauses contained in 29 CFR 5.5(a)(1) through (10) and such other clauses as the (write in the name of the Federal agency) may by appropriate instructions require, and also a clause requiring the subcontractors to include these clauses in any lower tier subcontracts. The prime contractor shall be responsible for the compliance by any subcontractor or lower tier subcontractor with all the contract clauses in 29 CFR 5.5.

(7) *Contract termination: debarment.* A breach of the contract clauses in 29 CFR 5.5 may be grounds for termination of the contract, and for debarment as a contractor and a subcontractor as provided in 29 CFR 5.12.

(8) *Compliance with Davis-Bacon and Related Act requirements*. All rulings and interpretations of the Davis-Bacon and Related Acts contained in 29 CFR parts 1, 3, and 5 are herein incorporated by reference in this contract.

(9) *Disputes concerning labor standards.* Disputes arising out of the labor standards provisions of this contract shall not be subject to the general disputes clause of this contract. Such disputes shall be resolved in accordance with the procedures of the Department of Labor set forth in 29 CFR parts 5, 6, and 7. Disputes within the meaning of this clause include disputes between the contractor (or any of its subcontractors) and the contracting agency, the U.S. Department of Labor, or the employees or their representatives.

(10) *Certification of eligibility.* (i) By entering into this contract, the contractor certifies that neither it (nor he or she) nor any person or firm who has an interest in the contractor's firm is a person or firm ineligible to be awarded Government contracts by virtue of section 3(a) of the Davis-Bacon Act or 29 CFR 5.12(a)(1).

(ii) No part of this contract shall be subcontracted to any person or firm ineligible for award of a Government contract by virtue of section 3(a) of the Davis-Bacon Act or 29 CFR 5.12(a)(1).

(iii) The penalty for making false statements is prescribed in the U.S. Criminal Code, 18 U.S.C. 1001.

(b) *Contract Work Hours and Safety Standards Act.* The Agency Head shall cause or require the contracting officer to insert the following clauses set forth in paragraphs (b)(1), (2), (3), and (4) of this section in full in any contract in an amount in excess of $100,000 and subject to the overtime provisions of the Contract Work Hours and Safety Standards Act. These clauses shall be inserted in addition to the clauses required by Sec. 5.5(a) or 4.6 of part 4 of this title. As used in this paragraph, the terms laborers and mechanics include watchmen and guards.

(1) *Overtime requirements*. No contractor or subcontractor contracting for any part of the contract work which may require or involve the employment of laborers or mechanics shall require or permit any such laborer or mechanic in any workweek in which he or she is employed on such work to work in excess of forty hours in such workweek unless such laborer or mechanic receives compensation at a rate not less than one and one-half times the basic rate of pay for all hours worked in excess of forty hours in such workweek.

(2) *Violation; liability for unpaid wages; liquidated damages.* In the event of any violation of the clause set forth in paragraph (b)(1) of this section the contractor and any subcontractor responsible there for shall be liable for the unpaid wages. In addition, such contractor and subcontractor shall be liable to the United States (in the case of work done under contract for the District of Columbia or a territory, to such District or to such territory), for liquidated damages. Such liquidated damages shall be computed with respect to each individual laborer or mechanic, including watchmen and guards, employed in violation of the clause set forth in paragraph (b)(1) of this section, in the sum of $10 for each calendar day on which such individual was required or permitted to work in excess of the standard workweek of forty hours without payment of the overtime wages required by the clause set forth in paragraph (b)(1) of this section.

(3) *Withholding for unpaid wages and liquidated damages*. The (write in the name of the Federal agency or the loan or grant recipient) shall upon its own action or upon written request of an authorized representative of the Department of Labor withhold or cause to be withheld, from any moneys payable on account of work performed by the contractor or subcontractor under any such contract or any other Federal contract with the same prime contractor, or any other federally-assisted contract subject to the Contract Work Hours and Safety Standards Act, which is held by the same prime contractor, such sums as may be determined to be necessary to satisfy any liabilities of such contractor or subcontractor for unpaid wages and liquidated damages as provided in the clause set forth in paragraph (b)(2) of this section.

(4) *Subcontracts.* The contractor or subcontractor shall insert in any subcontracts the clauses set forth in paragraph (b)(1) through (4) of this section and also a clause requiring the subcontractors to include these clauses in any lower tier subcontracts. The prime contractor shall be responsible for compliance by any subcontractor or lower tier subcontractor with the clauses set forth in paragraphs (b)(1) through (4) of this section.

(c) In addition to the clauses contained in paragraph (b), in any contract subject only to the Contract Work Hours and Safety Standards Act and not to any of the other statutes cited in Sec. 5.1, the Agency Head shall cause or require the contracting officer to insert a clause requiring that the contractor or subcontractor shall maintain payrolls and basic payroll records during the course of the work and shall preserve them for a period of three years from the completion of the contract for all laborers and mechanics, including guards and watchmen, working on the contract. Such records shall contain the name and address of each such employee, social security number, correct classifications, hourly rates of wages paid, daily and weekly number of hours worked, deductions made, and actual wages paid. Further, the Agency Head shall cause or require the contracting officer to insert in any such contract a clause providing that the records to be maintained under this paragraph shall be made available by the contractor or subcontractor for inspection, copying, or transcription by authorized representatives of the (write the name of agency) and the Department of Labor, and the contractor or subcontractor will permit such representatives to interview employees during working hours on the job.

Disadvantaged Business Enterprises (DBE)

Prime contractors bidding on this project must follow, document, and maintain documentation of their Good Faith Efforts, as listed below, to ensure that Disadvantaged Business Enterprises (DBEs) have the opportunity to participate in the project by increasing DBE awareness of procurement efforts and outreach. Bidders must make the following Good Faith Efforts for any work that will be subcontracted.

1. Ensure DBEs are made aware of contracting opportunities to the fullest extent practicable through outreach and recruitment activities. Place DBEs on solicitation lists and solicit DBEs whenever they are potential sources.

2. Make information on forthcoming opportunities available to DBEs. Arrange time-frames for contracts and establish delivery schedules, where the requirements permit, in a way that encourages and facilitates participation by DBEs in the competitive process. Whenever possible, post solicitation for bids or proposals for a minimum of 30 calendar days before the bid or proposal closing date. The DBEs should be given a minimum of 5 days to respond to the posting.

3. Consider in the contracting process whether firms competing for large contracts can be subcontracted with DBEs. Divide total requirements, when economically feasible, into smaller tasks or quantities to permit maximum participation by DBEs in the competitive process.

4. Encourage contracting with a consortium of DBEs when a contract is too large for one DBE firm to handle individually.

5. Use the services and assistance of the Small Business Administration and the Minority Business Development Agency of the U.S. Department of Commerce.

Subsequent to compliance with the Good Faith Efforts, the following conditions also apply under the DBE requirements. Completed Good Faith Efforts Worksheets (Attachment 1), along with the required supporting documentation outlined in the instructions, must be submitted with your bid proposal. EPA form 6100-2 must also be provided at the pre-bid meeting. A copy of this form is available on the Forms and Guidance page of the Revolving Loan website.

1. The prime contractor must pay its subcontractor for work that has been satisfactorily completed no more than 30 days from the prime contractor's receipt of payment from the owner.

2. The prime contractor must notify the owner in writing prior to the termination of any DBE subcontractor for convenience by the prime contractor and employ the Good Faith Efforts if soliciting a replacement contractor.

3. If a DBE contractor fails to complete work under the subcontract for any reason, the prime contractor must employ the Good Faith Efforts if soliciting a replacement contractor.

4. The prime contractor must employ the Good Faith Efforts.

Debarment Certification

The prime contractor must provide a completed **Certification Regarding Debarment, Suspension, and Other Responsibility Matters Form** with its bid or proposal package to the owner (Attachment 2).

Attachment 1

Disadvantaged Business Enterprise (DBE) Utilization
GOOD FAITH EFFORTS WORKSHEET

Michigan Department of Environmental Quality
Office of Drinking Water and Municipal Assistance– Revolving Loan Section
Disadvantaged Business Enterprise (DBE) Utilization
State Revolving Fund/Drinking Water Revolving Fund
GOOD FAITH EFFORTS WORKSHEET

Bidder:_____

Subcontract Area of Work (one per worksheet:_____

Outreach Goal: Solicit a minimum of three (3) DBEs via email/letter/fax. It is recommended that various sources be used to locate the minimum number of DBEs. The Michigan Department of Transportation (MDOT) website and www.sam.gov registries may be two resources used to find a minimum of three DBEs.

List the DBEs contacted for the above area of work and complete the following information for each DBE.

Company Name	Type of Contact	Date of Contact	Price Quote Received	Accepted/ Rejected	Please Explain if Rejected
				☐ A ☐ R	
				☐ A ☐ R	
				☐ A ☐ R	
				☐ A ☐ R	
				☐ A ☐ R	
				☐ A ☐ R	

Explanation for Not Achieving a Minimum of Three Contacts; you may include a printout of the MDOT and www.sam.gov search results (attach extra sheets if necessary):

MITA DBE Posting Date (if applicable): _____
(attach a copy of the DBE advertisement)

Other Efforts (attach extra sheets if necessary):

Please include the completed worksheet and supporting documentation with the bid proposal.

Rev.3-2015

Michigan Department of Environmental Quality
Office of Drinking Water and Municipal Assistance– Revolving Loan Section
Disadvantaged Business Enterprise (DBE) Utilization
State Revolving Fund/Drinking Water Revolving Fund
GOOD FAITH EFFORTS WORKSHEET

Instructions to Bidders for the Completion of the Good Faith Efforts Worksheet

1. Separate worksheets must be provided for each area of work to be subcontracted out. This includes both major and minor subcontracts.

2. A minimum of three (3) DBEs must be contacted by a verifiable means of communication such as e-mail, letter, or fax for each area of work to be subcontracted out. Copies of the solicitation letters/e-mails and fax confirmation sheets must be provided with the worksheet.

3. If less that three (3) DBEs exist statewide for the area of work, then provide documentation that other DBE resources were consulted. This may include the MDOT and www.sam.gov registries and an advertisement is a publication. A printout of the website searched (conducted prior to the end of the bid period) must be submitted.

4. Posting solicitations for quotes/proposals from DBEs on the MITA website (www.mitadbe.com) is highly recommended to facilitate participation in the competitive process whenever possible. The solicitation needs to identify the project and the areas of work to be subcontracted out. A copy of the MITA DBE advertisement must be submitted with the Good Faith Efforts worksheet, if used, or a printout of the resulting quotes posted to the MITA website can be submitted with this form as supporting documentation.

5. If the area of work is so specialized that no DBEs exist, then an explanation is required to support that conclusion, including the documentation required in No. 3 above.

6. The date of the DBE contact must be identified, as it is important to document that the DBE solicitation was made during the bid period and that sufficient time was given for the DBE to return a quote.

7. Each DBE firm's price quote must be identified if one was received or N/A entered on the worksheet if a quote was not received. Copies of all quotes must be submitted with the worksheet.

8. If a quote was received, indicate if it was accepted or rejected. Justification for not accepting a quote and not using the DBE subcontractor must be provided.

9. Under Other Efforts, please indicate additional steps you have taken to obtain DBE contractors and provide the appropriate supporting documentation such as:
   - Follow-up e-mails, faxes, or letters.
   - Copies of announcements/postings in newspapers, trade publications, or minority media that target DBE firms.

Rev. 3-2015

Attachment 2

Certification Regarding
Debarment, Suspension, and Other Responsibility Matters

Certification Regarding
Debarment, Suspension, and Other Responsibility Matters

The prospective participant certifies, to the best of its knowledge and belief, that it and its principals:

(1) Are not presently debarred, suspended, proposed for debarment, declared ineligible, or voluntarily excluded from participation in transactions under federal nonprocurement programs by any federal department or agency;

(2) Have not, within the three year period preceding the proposal, had one or more public transactions (federal, state, or local) terminated for cause or default; and

(3) Are not presently indicted or otherwise criminally or civilly charged by a government entity (federal, state, or local) and have not, within the three year period preceding the proposal, been convicted of or had a civil judgment rendered against it:

(a) For the commission of fraud or a criminal offense in connection with obtaining, attempting to obtain, or performing a public transaction (federal, state, or local) or a procurement contract under such a public transaction;

(b) For the violation of federal or state antitrust statutes, including those proscribing price fixing between competitors, the allocation of customers between competitors, or bid rigging; or

(c) For the commission of embezzlement, theft, forgery, bribery, falsification or destruction of records, making false statements, or receiving stolen property.

I understand that a false statement on this certification may be grounds for the rejection of this proposal or the termination of the award. In addition, under 18 U.S.C. §1001, a false statement may result in a fine of up to $10,000 or imprisonment for up to five years, or both.

_____
Name and Title of Authorized Representative

_____
Name of Participant Agency or Firm

_____
Signature of Authorized Representative Date

☐ I am unable to certify to the above statement. Attached is my explanation.

Attachment 3

Frequently Asked Questions About
Disadvantaged Business Enterprise (DBE) Solicitation

Disadvantaged Business Enterprise (DBE) Requirements
Frequently Asked Questions Regarding Contractor Compliance

Q: What is the Good Faith Efforts Worksheet form and how is it to be completed?

A: This form captures efforts by the prime contractor to solicit DBEs for each area of work type that will be subcontracted out. A separate Good Faith Efforts Worksheet must be provided by the prime contractor for each area of work type to be subcontracted out. There are specific instructions that accompany this form that prescribe minimum efforts which bidders must make in order to be in compliance with the DBE requirements.

Q: Can non-certified DBEs be used?

A: While non-certified DBEs can be used, only DBEs, MBEs, and WBEs that are certified by EPA, SBA, or MDOT (or by tribal, state and local governments, as long as their standards for certification meet or exceed the standards in EPA policy) can be counted toward the fair share goal. Proof of certification by one of these recognized and approved agencies should be sought from each DBE.

Q: How does a DBE get certified?

A: Applications for certification under MDOT can be found at http://mdotjboss.state.mi.us/UCP/LearnHowServlet.

Applications for certification under EPA can be found on EPA's Small Business Programs website at http://www.epa.gov/osbp/dbe_firm.htm under Certification Forms.

Q: If a bidder follows the MDOT DBE requirements, will the bidder be in compliance with the SRF/DWRF DBE requirements?

A: No. Federally funded highway projects utilize DBE goals, which require that a certain percentage of work be performed by DBE subcontractors. For SRF/DWRF projects, there is no financial goal. However, there is a solicitation effort goal. Bidders must use Good Faith Efforts for each and every area of work to be subcontracted out to obtain DBEs. The bidders are not required to use DBEs if the quotes are higher than non-DBE subcontractors. **There is no required DBE participation percentage contract goal for the SRF/DWRF.** However, if the SRF/DWRF project is part of a joint project with MDOT, the project can be excluded from SRF/DWRF DBE requirements (i.e., the Good Faith Efforts Worksheet is not required) as it would be difficult to comply with both programs' requirements.

Q. Must the Good Faith Efforts Worksheet and supporting documentation be turned in with the bid proposals?

A: Yes. This is a requirement to document that the contractor has complied with the DBE requirements and the Good Faith Efforts. These compliance efforts must be done during the bidding phase and not after-the-fact. It is highly recommended that the need for these efforts and the submittal of the forms with the bid proposals be emphasized at the pre-bid meetings. Failure to show that the Good Faith Efforts were complied with during the bidding process can lead to a prime contractor being found non-responsive.

Q: Does EPA form 6100-2 need to be provided at the pre-bid meeting?

A: Yes. The form must be made available at the pre-bid meeting.

Q: What kinds of documentation should a contractor provide to document solicitation efforts?

A: Documentation can include fax confirmation sheets, copies of solicitation letters/e-mails, printouts of online solicitations, printouts of online search results, affidavits of publication in newspapers, etc.

Q: How much time will compliance with the Good Faith Efforts require in terms of structuring an adequate bidding period?

A: Due to the extent of the efforts required, a minimum of 30 calendar days is recommended between bid posting and bid opening to ensure adequate time for contractors to locate certified DBEs and solicit quotes.

Q: How does a contractor locate certified DBEs?

A: The Michigan Department of Transportation has a directory of all Michigan certified entities located at http://mdotjboss.state.mi.us/UCP/. Additionally, the federal System for Award Management (SAM) is another place to search and can be found at www.sam.gov. SAM contains information from the former Central Contractor Registration (CCR) database.

Q: If the bidder does not intend to subcontract any work, what forms, if any, must be provided with the bid proposal?

A: The bidder should complete the Good Faith Efforts Worksheet with a notation that no subcontracting will be done. However, if the bidder is awarded the contract and then decides to subcontract work at any point, then the Good Faith Efforts must be made to solicit DBEs.

Q: In the perfect world, the Good Faith Efforts Worksheet is required to be turned in with the proposal. What if no forms are turned in with the bid proposal or forms are blank or incomplete? Should this be cause to determine that the bidder is non-responsive?

A: While the Good Faith Efforts Worksheet is important, it is more critical to confirm that the contractor complied with the DBE requirements prior to bid opening. The owner should contact the bidder as soon as deficiencies are noted for a determination/documentation of efforts taken to comply with the DBE requirements. Immediate submittal of the completed forms will be acceptable provided the Good Faith Efforts were made and it is just a matter of transferring information to the forms.

Q: If the prime contractor is a DBE, does he have to solicit DBE subcontractors?

A: Yes, the DBE requirements still apply if the prime intends to subcontract work out. Good Faith Efforts must be used to solicit DBEs.

Q: If the area of work is one where there are less than three DBE contractors, how is the contractor to document this?

A: Copies of printouts from MDOT and SAM showing no DBEs and advertisements soliciting quotes for all subcontract areas, including the questionable areas, will be adequate if the dates on the printouts are prior to the bid or proposal closing date.