CITY OF MUSKEGON INSPECTIONS DEPT

MUSKEGON
West Michigan's Shoreline City
www.shorelinecity.com

INVITATION FOR DEMOLITION AND SITE CLEARANCE BIDS
CITY OF MUSKEGON, INSPECTIONS DEPARTMENT.

The City of Muskegon, Michigan will receive sealed bids until 2:00 PM on **Dec. 17, 2019** at the City Clerk's office; City Hall, 933 Terrace Street, Muskegon, Michigan 49440; at which time and place all bids will be publicly opened and read aloud for the following demolition and site clearance project: All structures located at:

1079 Holt St. Muskegon (single family residence / detached garage)
593 W. Webster Ave. Muskegon (single family residence)

Copies of the contract documents may be obtained at the Inspections Department in City Hall on the second-floor room #201, or on the City's website www.muskegon-mi.gov under "Quick Links".

The project consists of demolishing all structures on the site(s), removing the debris to a licensed landfill and filling excavations in accordance with contract documents and city ordinance.
This is to include the removal of any shrubbery/bushes/fencing/asbestos on the property. Please refer to the City's website to view the ad and any additional requirements/information that are not in the ad. All forms within the bid documents of the City's Demolition Proposal/Contract must also be submitted.

Bid proposals should be placed inside a 9" x 12"envelope addressed to the City of Muskegon with the title "Demolition Bid" and the address of the site(s) on the outside of the envelope. Bidder's name, address and phone number must be clearly marked on the outside of the envelope. You may bid on any one or all of the listed structures.

Hiring goals and percentages are set forth in the Contract Documents. No bid may be withdrawn within 60 days after the bid opening. All work must be completed within 30 days of the issuance of the Notice to Proceed (the only exception must be approved by the City and the Contractor).

The City of Muskegon reserves the right to reject any or all bids, or to waive any informalities or irregularities in the bidding.

City of Muskegon, MICHIGAN
Ann Meisch, City Clerk

Publish Tuesday, Dec.3, 2019

CITY OF MUSKEGON INSPECTIONS DEPT

MUSKEGON
West Michigan's Shoreline City
www.shorelinecity.com

The City would like individual bids for each address submitted; they may be placed in one envelope. The City is looking to bid the addresses as a group for one (1) demolition contractor but may choose to go with more than one (1) contractor in cases where there are more than one (1) property being solicited for bidding. The City would like to see all the structures demolished within 30 days of the "Notice to Proceed" being submitted to the winning contractor.

NOTE: The City has tested for the presence asbestos for each listed property and has provided the approximate locations and quantities. The complete asbestos testing report (approx. 40 pages) is available for each property at request. The demolition contractor will be responsible for the proper remediation and disposal of asbestos or any other described hazards. See attached property information sheets for asbestos amounts and locations.

1) The demolition contractor will need to cut & cap the water/sewer and in some instances, the Water/Sewer Maintenance Department will need to gain entry prior to the demolition to remove any water meters.
2) The City will have the gas and electric cut/capped & disconnected at each property.
3) The demolition contractor will need to work with any adjacent property owners that may be too close or have items that are too close to the demolition site.
4) The City is asking that the bids include no-grow grass only.

If you have any questions regarding the bid process or the requirements; please contact, Lance Bonifield (231) 724-3900. There will be no addendums added after 2 p.m. on Dec. 17, 2019

CITY OF MUSKEGON INSPECTIONS DEPT

MUSKEGON
West Michigan's Shoreline City
www.shorelinecity.com

Property Information
1079 Holt St.
Muskegon MI.

Asbestos Survey: The following is the asbestos inspection report for 1079 Holt St. The following building materials were identified to contain asbestos in quantities greater than 1.0% or presumed to contain asbestos greater than 1.0% and are required to be removed by a licensed asbestos abatement contractor prior to the scheduled demolition:

- Approx. 200SF. of floor tile in basement (red/brown tile)
- Approx. 200 SF floor tile in basement (white/brown tile)
- Approx. 4 SF black sink undercoating on sink in basement

- **Building Information**

General

Floor Area	912 sq. ft. approx..	Estimated TCV NA	
Garage Area	395 sq. ft.	Basement Area	1044 sq. ft. approx..
Foundation Size	1307 sq. ft. approx..		
Year Built	1964	Year Remodeled	*Not Available*
Occupancy	Residential	Class	
Effective Age	55 yrs	Tri-Level	No
Percent Complete	0%	Heat F/A	

CITY OF MUSKEGON INSPECTIONS DEPT

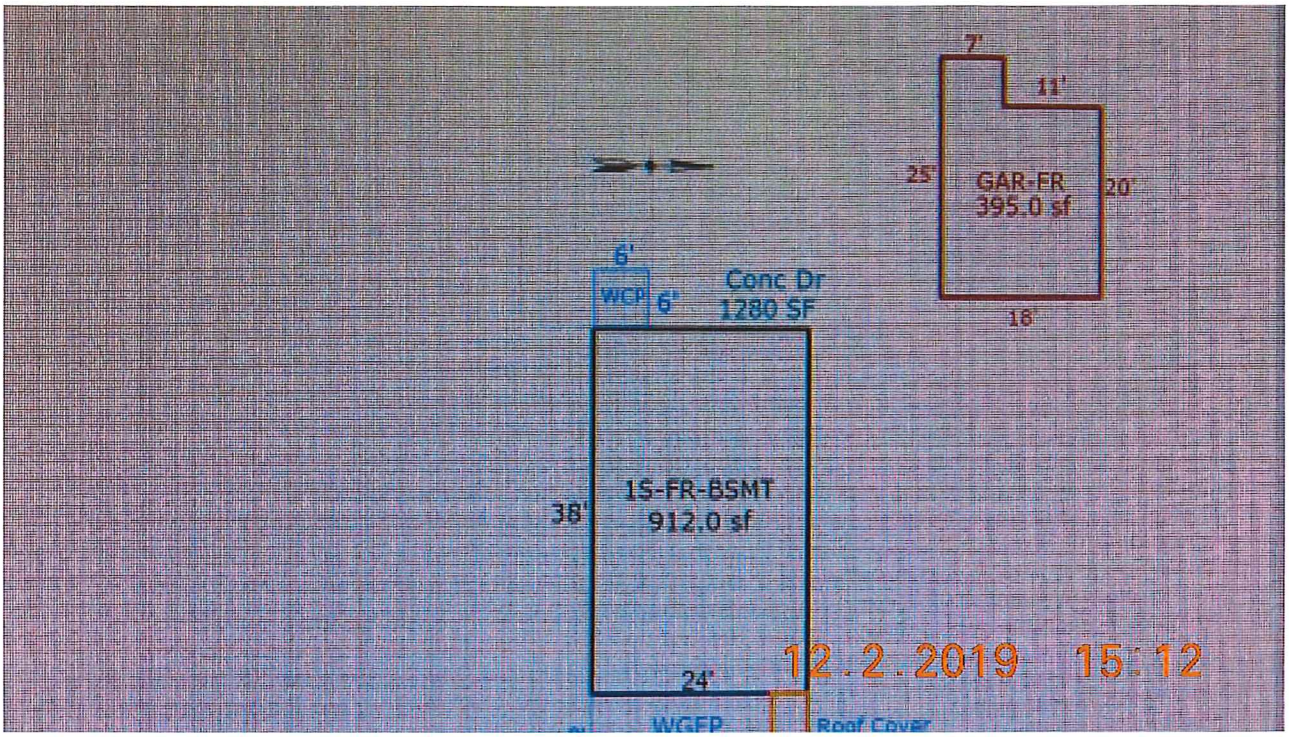

CITY OF MUSKEGON INSPECTIONS DEPT

MUSKEGON
West Michigan's Shoreline City
www.shorelinecity.com

Property Information
593 W. Webster Ave.
Muskegon MI.

Asbestos Survey: The following is the asbestos inspection report for 593 W. Webster Ave. The following building materials were identified to contain asbestos in quantities greater than 1.0% or presumed to contain asbestos greater than 1.0% and are required to be removed by a licensed asbestos abatement contractor prior to the scheduled demolition:

- Approx. 500SF. of floor tile various locations
- Approx.80 SF. of duct insulation
- Approx. 210 LF. Pipe insulation
- Approx. 30 SF. boiler insulation
- Approx. 30 SF. of window glazing (stored windows in basement)
- **Building Information**

General

Floor Area	1300 sq. ft. approx..	Estimated TCV NA	
Garage Area	NA	Basement Area	800 sq. ft. approx..
Foundation Size	800 sq. ft. approx..		
Year Built	1963	Year Remodeled	*Not Available*
Occupancy	Residential	Class	
Effective Age	56 yrs	Tri-Level	No
Percent Complete	0%	Heat F/A	
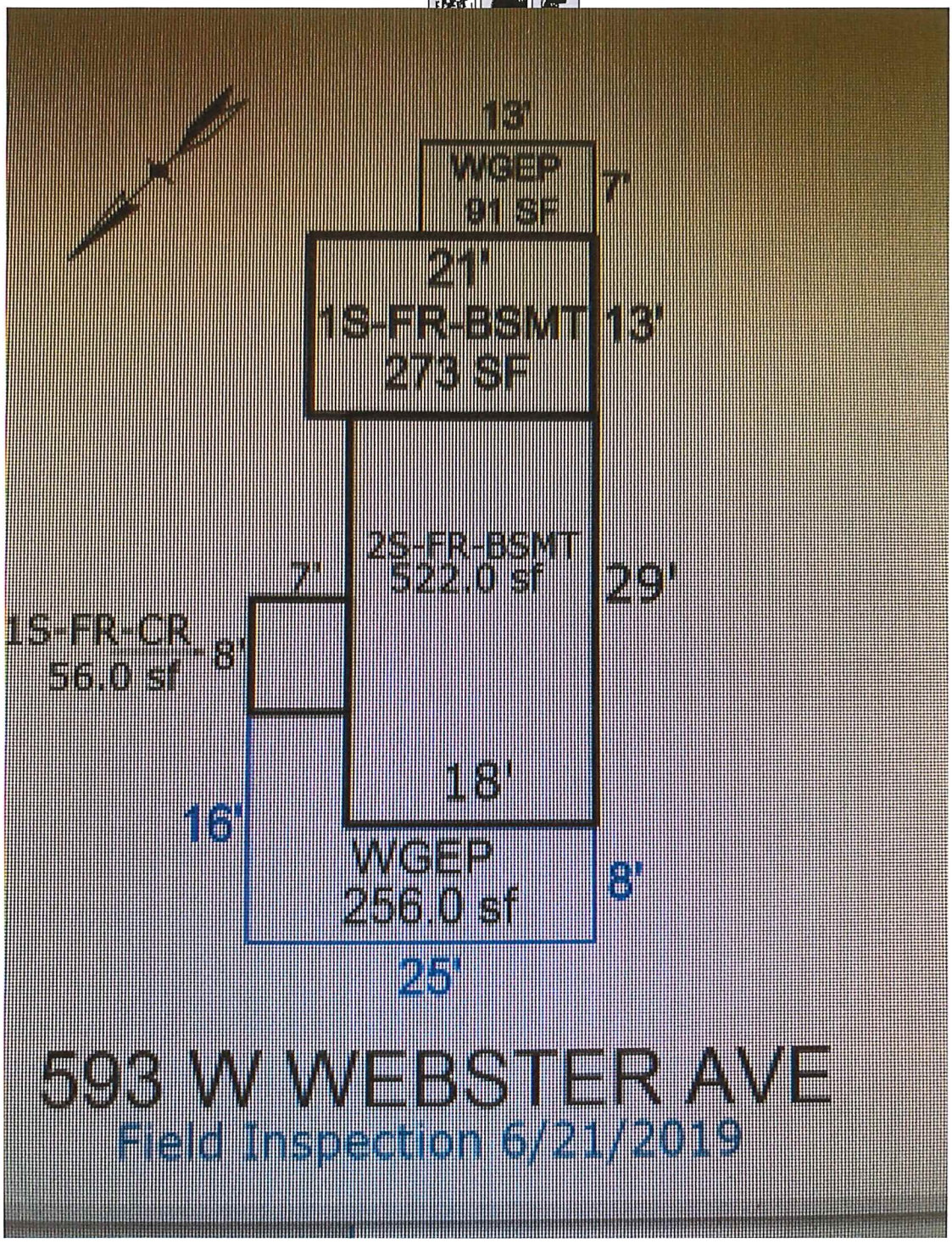
CITY OF MUSKEGON INSPECTIONS DEPT