NESHAP RENOVATION / DEMOLITION INSPECTION OF ASBESTOS CONTAINING MATERIALS AND OTHER HAZARDOUS WASTE MATERIALS FOR THE PROPERTY KNOWN AS:

1095 1st St.
Muskegon, MI 49440

Prepared for:

City of Muskegon
933 Terrace Street, Room 202
Muskegon, MI 49440
231-724-6760

Prepared By:

ETC - Environmental Services
38900 Huron River Drive
Romulus, Michigan 48174
(734) 955-6600

January 19th, 2016

ETC Job #: 177225

TABLE OF CONTENTS

1) Introduction

2) Information about Asbestos Inspections

   a) Sampling Procedures
   b) PLM Analysis Methodology
   c) Interpretation of Inspection Results
   d) Other Hazardous Materials

3) Regulatory Requirements

   a) MIOSHA Construction Asbestos Requirements
   b) NESHAPs Requirements
   c) Notification Requirements
   d) Abatement Requirements

4) Summary and Conclusions

   Chart A – Materials Sampled and Asbestos Content

   Chart B – Other Hazardous Materials Located

5) Inspector's Information/Certification

Appendices

Appendix A - Polarized Light Microscopy Asbestos Analysis Results

Appendix B – Site Map

Appendix C- Photographs

Appendix D - State of Michigan Notification of Intent to Renovate or Demolish

1. Introduction

The City of Muskegon contracted ETC - Environmental Services (ETC) to perform a renovation / demolition inspection of the building located at 1095 1st St, Muskegon, MI 49440. This inspection was conducted on January 19th, 2016.

The EPA under the National Emission Standards for Hazardous Air Pollutants (NESHAPs) asbestos rule requires that prior to the start of a renovation and/or demolition project, the building must be inspected for asbestos containing materials (ACM's). The purpose of this inspection was to determine the presence and quantity of friable or potentially friable ACM's. Depending on the ACM found and the condition that it is in, removal of the material may be necessary before demolition work is to begin. Prior to the start of a demolition project, it is necessary that friable or potentially friable ACM's be removed.

ETC's certified inspector, Aaron Yankee and Stuart Yankee, conducted the ACBM inspection and identified materials suspected of containing asbestos. Aaron Yankee and Stuart Yankee's State of Michigan Asbestos Building Inspector's certification number is A-42490 and A-4115.

Wherever potential asbestos materials were found, data was collected and recorded regarding quantities and observed conditions of the suspect material. As required by the Occupational Safety and Health (OSHA) and the Environmental Protection Agency (EPA), three (3) samples of each type of material were taken in different locations to determine actual asbestos content.

Included along with this report are copies of the bulk sample results, a site map showing sample locations and a copy of the State of Michigan Notification of Intent to Renovate/Demolish. This information will be necessary for the asbestos abatement contractor selected to perform asbestos abatement activities in the house. ETC has included its information on the second page.

2. Information about Asbestos Inspections

a. Sampling Procedures

Representative bulk samples of suspect asbestos containing building materials were randomly collected within each building area. The materials sampled were broken down into distinct homogenous (similar) materials. Homogenous material determination was based on the following criteria:

- Similar physical characteristics (same color and texture, etc.)
- Application (sprayed-on, troweled-on, assembly into a system etc.)
- Material function (Thermal insulation, floor tile, wallboard system etc.)

It is important to note that some companies are only taking one sample of select non-friable materials. While this procedure is allowed under the NESHAPs regulation, the OSHA standard suggests a minimum of three samples of each

homogeneous material. This is a better approach due the potential errors in the analytical method used. ***To provide the most accurate information possible and be sure of our results, ETC chooses to take three samples of each sampled material.***

Additionally, some inspection companies have taken to assuming that materials contain asbestos rather than paying for the time and expenses of sampling them. This is not if the clients best interest. If materials are being assumed to contain asbestos, the client must treat them as asbestos containing even if they are not. This can lead to significantly increased costs for the building owner. ***In general, ETC only assumes materials to be asbestos when sampling them will ruin their integrity (i.e. fire doors) or when they are too dangerous to sample (i.e. live electrical lines).***

b. PLM Analysis Methodology

PLM samples were analyzed utilizing the Environmental Protection Agency's Test Methods: Methods for the determination of Asbestos in Bulk Building Materials (EPA 600/R-93/116, July 1993) and the McCrone Research Institute's The Asbestos Particle Atlas as method references. Additional treatment and tests may be required to accurately define composition (i.e. ashing, extraction, acetone treatment, and TEM).

Analysis was performed by using the bulk sample for visual observation and slide preparation(s) for microscopic examination and identification. The samples analyzed for asbestos (chrysotile, amosite, crocidolite, anthophyllite, and actinolite/tremolite), fibrous non-asbestos constituents (mineral wool, cellulose, etc.) and non-fibrous constituents. Using a stereoscope, the microscopist visually estimated relative amounts of each constituent by determining the volume of each constituent in proportion to the total volume of the sample.

According to NESHAP requirements any bulk sample that has asbestos content above 0% but below 10% should be point counted for final determination of percentage***. Please note, the contract DID NOT include point counting as defined in NESHAP.*** Should City of Muskegon wish to have this additional analysis conducted, ETC can send any samples in this range for point counting. However, this will require additional charges for analysis. Therefore, for any samples in the range above 0% but below 10% these results can only be considered estimates.

c. Interpretation of Inspection Results

A material is considered by OSHA, the EPA and the State of Michigan to be asbestos-containing if at least one sample collected from the homogenous material has asbestos fibers present in a concentration greater than one percent (>1 %).

A summary of the materials sampled, asbestos content, quantities and locations can be found on the Chart A in Section 4.0 – Summary and Conclusions.

d. Other Hazardous Materials

Additionally, a chart showing other hazardous materials (above the household quantity limitations) found at the site is included in Chart B – Section 4.0 – Summary and Conclusions. This lists non-asbestos materials that may be hazardous and require special handling and disposal requirements. Items that might be in this category include things like mercury switches, florescent lighting tubes, halogen lights, Freon in refrigeration units, pesticides, herbicides, paints, solvents, etc.

However, under the Resource Conservation and Recovery Act (RCRA) that addresses hazardous wastes, there is residential household quantity exclusion. Therefore, these materials will only be listed in this chart if they are present in quantities larger than what would be expected in a normal household. For instance, if the home was a farm and had a 55 gallon drum of pesticide present, this would be listed in Chart B. On the other hand if there were a few pesticide containers present as would be found in most homes these materials would not be listed.

3. Regulatory Requirements

There are two main regulations that affect renovation / demolition of residential homes and asbestos materials. The MIOSHA asbestos construction standard has requirements to protect the workers performing the renovation / demolition while the EPA – NESHAPs regulation has requirements that protect the general public and environment.

a. MIOSHA Construction Asbestos Regulations

The MIOSHA standard establishes a permissible exposure limit (PEL) average over an 8 hour day. This means that this is the maximum level of asbestos that workers and/or employees can be exposed to without respirator protection and protective clothing. Should air sampling during renovation or demolition activities be at or near the PEL the employer will have to:

- Notify Workers
- Worker Training
- Post Danger Signs
- Establish periodic air monitoring regulated areas, and decontamination facilities
- Provide respiratory protection and personnel protective clothing
- Employee Respiration Monitoring
- Record keeping

- Medical Surveillance (if employee will be exposed 30 days per year or more).

Until recently, only schools were federally mandated to conduct asbestos inspections of their buildings. However, with the passage of new MIOSHA regulations, all building owners (in this case City of Muskegon) is now required to notify all renovation / demolition workers of presence, location and quantity of all asbestos containing building materials within the building.

In most cases, it is more practical to have an asbestos contractor removal the ACM from the building prior to renovation / demolition than have the renovation / demolition contractor comply with all these requirements.

b. NESHAP Requirements

Prior to beginning a renovation or demolition project, NESHAP (enforced in Michigan by the Department of Environmental Quality – MDEQ) requires a full inspection of the following materials to determine their asbestos content:

- Friable Materials
- Category 1 – Non-friable Materials (Packings, gaskets, resilient floor covering, and asphalt roofing products)
- Category II – Non-friable Materials (All other non-friable materials)

In general, MDEQ requires any identified asbestos materials to be removed prior to renovation or demolition activities that would dislodge, disturb or otherwise affect these materials. There is an exception that if a licensed supervisor will state in writing that the material will not become friable during the renovation / demolition process it may be left in the building. However, be very careful with this exemption. MDEQ has stated that they believe that the only materials that MIGHT qualify for this exemption would be roofing felt and asphalt roofing materials. In order to use even this small exemption, the following would be required from the demolition contractor:

- A licensed asbestos abatement supervisor will sign that the material will not become friable
- The supervisor will have to be on-site during all renovation or demolition to insure that material stays intact.
- If MDEQ reviews that site and finds the material crumbled or disturbed both the contractor and building owner may be cited up to $27500 per day.
- The waste generated from the activity must be taken to an asbestos dump and they must be informed that the waste is mixed asbestos waste.

It is obviously very expensive and difficult to try and leave ACM within and area / building during renovation or demolition activities. Therefore, ETC recommends that all ACM be removed. This is why ETC does not assume materials to be ACM.

c. Notification Requirements

When performing abatement work within the State of Michigan, notification requirements depend on the quantity of materials and the friability of the material being removed.

If removing friable material above >160 square feet and / or 260 linear feet, the contractor must provide a ten working day notification to Michigan Department of Environmental Quality (MDEQ) and a ten calendar day notification to Michigan Department of Licensing and Regulatory Affairs (LARA) – Asbestos Program. If only non-friable materials are being removed, MDEQ does not want a notification.

If removing above >15 square feet but < 160 square feet, or > 10 linear feet but < 260 linear feet the contractor only needs to notify the LARA as stated above.

For removals of < 15 square feet or < 10 linear feet, not notification is required.

In conjunction with any notification to LARA, the contractor must pay a 1% fee for the project. This fee is to reflect 1% of the total abatement contract amount.

d. Abatement Requirements

Any company hired to remove identified ACM must insure that all asbestos companies, supervisors, workers are be licensed by the LARA. Additionally, these companies must insure that:

- The State of Michigan must be notified of the work in advance
- An asbestos supervisor must be on-site at all times when work is occurring
- All work must be completed within regulated work areas
- All work must be completed utilizing asbestos work practices defined in the MIOSHA regulations
- Have on-site personnel sampling conducted during the removal activities
- The contractor must request and pass (below 0.05 f/cc) a final asbestos clearance performed by a neutral third party prior to dismantling and leaving the site.
- Meet all other current regulations and standards.

In addition to these requirements, ETC strongly recommends that City of Muskegon insure that they receive the following documents from the contractor prior to making final payment:

- Written / signed documentation from the supervisor if any asbestos materials are to be left in place during renovation or demolition (Not recommended)
- Copy of the asbestos abatement notification
- Copy of the personnel monitoring during the work

- Copy of the final asbestos clearance report

By requiring these documents, City of Muskegon will substantially reduce their liability should something occur during the asbestos removal at this site.

4. Summary and Conclusions

ETC has endeavored to identify potential asbestos containing materials (ACM) that were accessible (without destructive testing) at the time of the inspection, other potential ACM may be buried or inaccessible at the time of the initial survey.

As has been evidenced on numerous other demolition and renovation projects, when tearing out or demolishing existing building surfaces, it is very common to encounter other building materials that were not accessible during the initial testing for ACM or lead / cadmium painted surfaces. It is therefore incumbent on City of Muskegon or their selected construction / renovation contractor to refer to the chart of sampled materials consistently during the renovation process. If materials are encountered during this process that are not clearly identifiable on the initial survey chart, ETC should be called to test and verify the asbestos / lead / cadmium content of these items.

ETC cannot be held responsible for materials encountered after the initial survey is completed unless we are contacted and given the opportunity to test and verify the material content. The costs associated with this additional testing are not included within the scope of this project and will incur additional charges for the additional sampling and analysis.

On the following charts, please find:

- Chart A - Is a summary of the materials that were sampled. Materials that test positive for asbestos have been bolded to make identification easier. ***If additional materials are encountered that were not previously identified, the contractor is responsible to contact ETC and have these materials tested. These additional sampling costs are not included in the scope of work or price for this survey.***

  Quantities that are listed are <u>estimates only</u>; in general, listed quantities represent <u>only</u> what was visible during testing. It is likely that where ACM has been identified throughout specific floors, similar materials and quantities exist on other like floors. It is the contractors'/client's responsibility to verify all amounts of asbestos identified during any bid process, or during future renovation and/or demolition activities. Materials that are identical in both relative location and physical description to already tested materials listed in this report should <u>always be assumed</u> to be ACM.

- Chart B – Is a list of other hazardous materials (above RCRA household quantity levels) that will require special handling and disposal by the contractor.

Chart A – Materials Sampled and Asbestos Content				
Material #	**Material Description**	**Asbestos**	**Quantity**	**Location (Refer to map in Appendix B)**
1	Plaster, base coat and white finish.	No	10,000 SF	Throughout
2	Ceiling Tile, smooth white.	No	1,700 SF	Room's:1,3,4,5,6,7,8,9,10,11, 12,15,16
3	Peel and Stick Floor tile	No	150 SF	Rooms 13, 14
4	Linoleum over tile, grey pattern	No	300 SF	Rooms 11, 12
5	Linoleum over tile, blue pattern	No	50 SF	Rooms 9, 15
6	Tile under Linoleum, cream	No	50 SF	Rooms 9, 15
7	Linoleum, off white	No	300 SF	Room 8
8	Drywall	No	6,000 SF	Throughout
9	Seam tape	No	6,000 SF	Throughout
10	Mud/Joint Compound	No	6,000 SF	Throughout
11	**Window Glazing, White.**	**Yes**	**20 Units**	**Exterior**
12	Roof Shingles, Black	No	2,200 SF	Exterior
13	Linoleum, tan pattern	No	300 SF	Room 8
14	House Wrap, Black	No	3,400 SF	Exterior
15	Linoleum, Beige Mosaic	No	25 SF	14 Closet
16	Linoleum, Beige, Green.	No	25 SF	14 Closet

Chart B – Other Hazardous Materials Located (Above the household quantity Limitations)			
Material #	**Material Description**	**Quantity**	**Location**
1	Light Ballasts	2	Kitchen
2	Florescent Light Bulbs	4	Kitchen 2
3	Tires	6	Bedroom 13, Entry 14.

5. Inspector's Information

All inspection work was completed by a Michigan certified asbestos abatement inspector as detailed below.

This report reviewed and submitted by:

Aaron Yankee and Stuart Yankee
State of Michigan Certified Asbestos Building Inspector
State of Michigan Card #: A-42490 and A-4115

APPENDICES

APPENDIX A

POLARIZED LIGHT MICROSCOPY ASBESTOS ANALYSIS RESULT FORMS

ENVIRONMENTAL TESTING LABORATORIES, INC.

38900 HURON RIVER DRIVE, SUITE 200
ROMULUS, MICHIGAN 48174
(734) 955-6600
FAX: (734) 955-6604

REVISED REPORT

To : Environmental Testing And Consulting Inc.
38900 Huron River Drive
Romulus, MI 48174

Project Location : Vacant Residence
1095 1st St., Muskegon, MI

Attention : Samantha Ferguson

Client Project : N/A

ETC Job : 177225

Report Date : 1/22/2016

Login #	Sample ID	Work Requested	Completed
389897	01A	Asbestos Analysis	01/22/2016
389898	01B	Asbestos Analysis	01/22/2016
389899	01C	Asbestos Analysis	01/22/2016
389900	01D	Asbestos Analysis	01/22/2016
389901	01E	Asbestos Analysis	01/22/2016
389902	01F	Asbestos Analysis	01/22/2016
389903	01G	Asbestos Analysis	01/22/2016
389904	02A	Asbestos Analysis	01/22/2016
389905	02B	Asbestos Analysis	01/22/2016
389906	03A	Asbestos Analysis	01/22/2016
389907	03B	Asbestos Analysis	01/22/2016
389908	04A	Asbestos Analysis	01/22/2016
389909	04B	Asbestos Analysis	01/22/2016
389910	05A	Asbestos Analysis	01/22/2016
389911	05B	Asbestos Analysis	01/22/2016
389912	06A	Asbestos Analysis	01/22/2016
389913	06B	Asbestos Analysis	01/22/2016
389914	07A	Asbestos Analysis	01/22/2016
389915	07B	Asbestos Analysis	01/22/2016
389916	08A	Asbestos Analysis	01/22/2016

This report is intended for use solely by the individual or entity to which it is addressed. This report may not be used by the client to claim product certification, approval, or endorsement by NVLAP, NIST, or any agency of the Federal Government. It may contain information that is privileged, confidential and otherwise exempt by law from disclosure. If the reader of this information is not the intended recipient or an employee of its intended recipient, you are herewith notified that any dissemination, distribution or copying of this information is strictly prohibited. If you have received this information in error, please notify ETL immediately. Thank you.

Client Project : N/A

ETC Job : 177225

Report Date : 1/22/2016

Login #	Sample ID	Work Requested	Completed
389917	08B	Asbestos Analysis	01/22/2016
389918	09A	Asbestos Analysis	01/22/2016
389919	09B	Asbestos Analysis	01/22/2016
389920	10A	Asbestos Analysis	01/22/2016
389921	10B	Asbestos Analysis	01/22/2016
389922	11A	Asbestos Analysis	01/22/2016
389923	11B	Asbestos Analysis	01/22/2016
389924	12A	Asbestos Analysis	01/22/2016
389925	12B	Asbestos Analysis	01/22/2016
389926	13A	Asbestos Analysis	01/22/2016
389927	13B	Asbestos Analysis	01/22/2016
389928	14A	Asbestos Analysis	01/22/2016
389929	14B	Asbestos Analysis	01/22/2016
389930	15A	Asbestos Analysis	01/22/2016
389931	15B	Asbestos Analysis	01/22/2016
389932	16A	Asbestos Analysis	01/22/2016
389933	16B	Asbestos Analysis	01/22/2016

Reviewed by:

Quality Assurance Coordinator

This report is intended for use solely by the individual or entity to which it is addressed. This report may not be used by the client to claim product certification, approval, or endorsement by NVLAP, NIST, or any agency of the Federal Government. It may contain information that is privileged, confidential and otherwise exempt by law from disclosure. If the reader of this information is not the intended recipient or an employee of its intended recipient, you are herewith notified that any dissemination, distribution or copying of this information is strictly prohibited. If you have received this information in error, please notify ETL immediately. Thank you.

NVLAP LAB CODE 201028-0

Certificate of Analysis

Environmental Testing Laboratories, Inc.
38900 Huron River Drive,
Suite 200, Romulus, Michigan 48174,
(734) 955-6600, Fax: (734) 955-6604

Polarized Light Microscopy Asbestos Analysis Report

To : Environmental Testing And Consulting Inc.
38900 Huron River Drive
Romulus,MI 48174

Location : Vacant Residence
1095 1st St., Muskegon, MI

ETC Job : 177225
Client Project : N/A
Date Collected : 01/19/2016
Date Received : 01/21/2016
Date Analyzed : 01/22/2016

Sample	Description	Appearance	% Fibrous	% Non-Fibrous	% Asbestos
389897 01A Landing 4 Ceiling Layer-1 Analyst: Dave Cousino	Plaster	Gray Non-Fibrous Homogenous	3% Cellulose	97% Other	None Detected
389897 01A Landing 4 Ceiling Layer-2 Analyst: Dave Cousino	Skim Coat	White Non-Fibrous Homogenous	2% Cellulose	98% Other	None Detected
389898 01B KN 8 Ceiling Layer-1 Analyst: Dave Cousino	Plaster	Gray Non-Fibrous Homogenous	3% Cellulose	97% Other	None Detected
389898 01B KN 8 Ceiling Layer-2 Analyst: Dave Cousino	Skim Coat	White Non-Fibrous Homogenous	2% Cellulose	98% Other	None Detected
389899 01C BR 5 Wall Layer-1 Analyst: Dave Cousino	Plaster	Gray Non-Fibrous Homogenous	2% Cellulose	98% Other	None Detected
389899 01C BR 5 Wall Layer-2 Analyst: Dave Cousino	Skim Coat	White Non-Fibrous Homogenous	1% Cellulose	99% Other	None Detected
389900 01D Entry 2 Wall Layer-1 Analyst: Dave Cousino	Plaster	Gray Non-Fibrous Homogenous	3% Cellulose	97% Other	None Detected
389900 01D Entry 2 Wall Layer-2 Analyst: Dave Cousino	Skim Coat	White Non-Fibrous Homogenous	1% Cellulose	99% Other	None Detected

ETL, Inc. maintains liability limited to cost of analysis. This report relates only to the samples reported and may not be reproduced without written approval by ETL, Inc. Test Method EPA 600/R-93-116 & EPA 600/M4-82/020 or NYSDOH-ELAP item 198.1 and/or 198.6 was used to analyze all samples. Matrix interference and/or resolution limits (i.e. detecting asbestos in non-friable organically bound materials) may yield false results in certain circumstances. Quantitative transmission electron microscopy (TEM) is currently the only method that can pronounce materials as non-asbestos containing. Interpretation and use of test results are the responsibility of the client. ETL, Inc. is not responsible for the accuracy of the results when requested to physically separate and analyze layered samples. Any PLM results below 10% should be re-analyzed using the EPA recommended Point Count method. Any material that has greater than 1% asbestos content is considered to be an Asbestos Containing Material (ACM). These materials are regulated by both OSHA and the EPA and must be treated accordingly. Results are related to only to samples that were tested.

Environmental Testing Laboratories, Inc.
38900 Huron River Drive,
Suite 200, Romulus, Michigan 48174,
(734) 955-6600, Fax: (734) 955-6604

NVLAP LAB CODE 201028-0

Certificate of Analysis

Polarized Light Microscopy Asbestos Analysis Report

To : Environmental Testing And Consulting Inc.
38900 Huron River Drive
Romulus,MI 48174

Location : Vacant Residence
1095 1st St., Muskegon, MI

ETC Job : 177225
Client Project : N/A
Date Collected : 01/19/2016
Date Received : 01/21/2016
Date Analyzed : 01/22/2016

Sample	Description	Appearance	% Fibrous	% Non-Fibrous	% Asbestos
389901 01E BR 13 Ceiling Layer-1 Analyst: Dave Cousino	Plaster	Gray Non-Fibrous Homogenous	4% Cellulose	96% Other	None Detected
389901 01E BR 13 Ceiling Layer-2 Analyst: Dave Cousino	Skim Coat	White Non-Fibrous Homogenous	2% Cellulose	98% Other	None Detected
389902 01F LR 1 Wall Layer-1 Analyst: Dave Cousino	Plaster	Gray Non-Fibrous Homogenous	3% Cellulose	97% Other	None Detected
389902 01F LR 1 Wall Layer-2 Analyst: Dave Cousino	Skim Coat	White Non-Fibrous Homogenous	2% Cellulose	98% Other	None Detected
389903 01G KN 11 Wall Layer-1 Analyst: Dave Cousino	Plaster	Gray Non-Fibrous Homogenous	2% Cellulose	98% Other	None Detected
389903 01G KN 11 Wall Layer-2 Analyst: Dave Cousino	Skim Coat	White Non-Fibrous Homogenous	2% Cellulose	98% Other	None Detected
389904 02A DR 12 Ceiling Analyst: Dave Cousino	Smooth Ceiling Tile	White/Orange Fibrous Homogenous	98% Cellulose	2% Other	None Detected
389905 02B Landing 4 Ceiling Analyst: Dave Cousino	Smooth Ceiling Tile	White/Orange Fibrous Homogenous	97% Cellulose	3% Other	None Detected

ETL, Inc. maintains liability limited to cost of analysis. This report relates only to the samples reported and may not be reproduced without written approval by ETL, Inc. Test Method EPA 600/R-93-116 & EPA 600/M4-82/020 or NYSDOH-ELAP item 198.1 and/or 198.6 was used to analyze all samples. Matrix interference and/or resolution limits (i.e. detecting asbestos in non-friable organically bound materials) may yield false results in certain circumstances. Quantitative transmission electron microscopy (TEM) is currently the only method that can pronounce materials as non-asbestos containing. Interpretation and use of test results are the responsibility of the client. ETL, Inc. is not responsible for the accuracy of the results when requested to physically separate and analyze layered samples. Any PLM results below 10% should be re-analyzed using the EPA recommended Point Count method. Any material that has greater than 1% asbestos content is considered to be an Asbestos Containing Material (ACM). These materials are regulated by both OSHA and the EPA and must be treated accordingly. Results are related to only to samples that were tested.

NVLAP LAB CODE 201028-0

Certificate of Analysis

Environmental Testing Laboratories, Inc.
38900 Huron River Drive,
Suite 200, Romulus, Michigan 48174,
(734) 955-6600, Fax: (734) 955-6604

Polarized Light Microscopy Asbestos Analysis Report

To : Environmental Testing And Consulting Inc.
38900 Huron River Drive
Romulus,MI 48174

Location : Vacant Residence
1095 1st St., Muskegon, MI

ETC Job : 177225
Client Project : N/A
Date Collected : 01/19/2016
Date Received : 01/21/2016
Date Analyzed : 01/22/2016

Sample	Description	Appearance	% Fibrous	% Non-Fibrous	% Asbestos
389906 03A BR 13 Analyst: Dave Cousino	Stick On Floor Tile	Gray Non-Fibrous Homogenous	2% Cellulose	98% Other	None Detected
389907 03B BR 13 Analyst: Dave Cousino	Stick On Floor Tile	Gray Non-Fibrous Homogenous	2% Cellulose	98% Other	None Detected
389908 04A DR 12 Analyst: Dave Cousino	Floor Tile	Gray Non-Fibrous Homogenous	1% Cellulose	99% Other	None Detected
389909 04B KN 11 Analyst: Dave Cousino	Floor Tile	Gray Non-Fibrous Homogenous	2% Cellulose	98% Other	None Detected
389910 05A Bath 15 1st FL Analyst: Dave Cousino	Linoleum Over Tile	Blue Fibrous Homogenous	80% Cellulose	20% Other	None Detected
389911 05B Bath 9 2nd FL Analyst: Dave Cousino	Linoleum Over Tile	Blue Fibrous Homogenous	90% Cellulose	10% Other	None Detected
389912 06A Bath 15 1st FL Analyst: Dave Cousino	Tile Under Linoleum	Cream Non-Fibrous Homogenous	2% Cellulose	98% Other	None Detected

ETL, Inc. maintains liability limited to cost of analysis. This report relates only to the samples reported and may not be reproduced without written approval by ETL, Inc. Test Method EPA 600/R-93-116 & EPA 600/M4-82/020 or NYSDOH-ELAP item 198.1 and/or 198.6 was used to analyze all samples. Matrix interference and/or resolution limits (i.e. detecting asbestos in non-friable organically bound materials) may yield false results in certain circumstances. Quantitative transmission electron microscopy (TEM) is currently the only method that can pronounce materials as non-asbestos containing. Interpretation and use of test results are the responsibility of the client. ETL, Inc. is not responsible for the accuracy of the results when requested to physically separate and analyze layered samples. Any PLM results below 10% should be re-analyzed using the EPA recommended Point Count method. Any material that has greater than 1% asbestos content is considered to be an Asbestos Containing Material (ACM). These materials are regulated by both OSHA and the EPA and must be treated accordingly. Results are related to only to samples that were tested.

NVLAP LAB CODE 201028-0

Certificate of Analysis

Environmental Testing Laboratories, Inc.
38900 Huron River Drive,
Suite 200, Romulus, Michigan 48174,
(734) 955-6600, Fax: (734) 955-6604

Polarized Light Microscopy Asbestos Analysis Report

To : Environmental Testing And Consulting Inc.
38900 Huron River Drive
Romulus,MI 48174

Location : Vacant Residence
1095 1st St., Muskegon, MI

ETC Job : 177225
Client Project : N/A
Date Collected : 01/19/2016
Date Received : 01/21/2016
Date Analyzed : 01/22/2016

Sample	Description	Appearance	% Fibrous	% Non-Fibrous	% Asbestos
389913 06B Bath 9 2nd FL Analyst: Dave Cousino	Tile Under Linoleum	Cream Non-Fibrous Homogenous	2% Cellulose	98% Other	None Detected
389914 07A KN 8 2nd FL Analyst: Dave Cousino	Linoleum	Off White Fibrous Homogenous	40% Cellulose	60% Other	None Detected
389915 07B KN 8 2nd FL Analyst: Dave Cousino	Linoleum	Off White Fibrous Homogenous	40% Cellulose	60% Other	None Detected
389916 08A Entry 2 W Wall Analyst: Dave Cousino	Drywall	White Non-Fibrous Homogenous	2% Cellulose	98% Other	None Detected
389917 08B LR 1 S Wall Analyst: Dave Cousino	Drywall	White Non-Fibrous Homogenous	3% Cellulose	97% Other	None Detected
389918 09A Entry 2 Analyst: Dave Cousino	Seam Tape	Tan Fibrous Homogenous	98% Cellulose	2% Other	None Detected
389919 09B LR 1 Analyst: Dave Cousino	Seam Tape	Tan Fibrous Homogenous	97% Cellulose	3% Other	None Detected

ETL, Inc. maintains liability limited to cost of analysis. This report relates only to the samples reported and may not be reproduced without written approval by ETL, Inc. Test Method EPA 600/R-93-116 & EPA 600/M4-82/020 or NYSDOH-ELAP item 198.1 and/or 198.6 was used to analyze all samples. Matrix interference and/or resolution limits (i.e. detecting asbestos in non-friable organically bound materials) may yield false results in certain circumstances. Quantitative transmission electron microscopy (TEM) is currently the only method that can pronounce materials as non-asbestos containing. Interpretation and use of test results are the responsibility of the client. ETL, Inc. is not responsible for the accuracy of the results when requested to physically separate and analyze layered samples. Any PLM results below 10% should be re-analyzed using the EPA recommended Point Count method. Any material that has greater than 1% asbestos content is considered to be an Asbestos Containing Material (ACM). These materials are regulated by both OSHA and the EPA and must be treated accordingly. Results are related to only to samples that were tested.

Environmental Testing Laboratories, Inc.
38900 Huron River Drive,
Suite 200, Romulus, Michigan 48174,
(734) 955-6600, Fax: (734) 955-6604

NVLAP LAB CODE 201028-0

Certificate of Analysis

Polarized Light Microscopy Asbestos Analysis Report

To : Environmental Testing And Consulting Inc.
38900 Huron River Drive
Romulus,MI 48174

Location : Vacant Residence
1095 1st St., Muskegon, MI

ETC Job : 177225
Client Project : N/A
Date Collected : 01/19/2016
Date Received : 01/21/2016
Date Analyzed : 01/22/2016

Sample	Description	Appearance	% Fibrous	% Non-Fibrous	% Asbestos
389920 10A Entry 2 Analyst: Dave Cousino	Mud/Joint Compound	White Non-Fibrous Homogenous	5% Cellulose	95% Other	None Detected
389921 10B LR 1 Analyst: Dave Cousino	Mud/Joint Compound	White Non-Fibrous Homogenous	3% Cellulose	97% Other	None Detected
389922 11A Ext N Analyst: Dave Cousino	Window Glazing	White Non-Fibrous Homogenous	3% Cellulose	97% Other	None Detected
389923 11B Ext S Analyst: Dave Cousino 11B is a Different Window Glaze than 11B.	Window Glazing	White Non-Fibrous Homogenous	3% Cellulose	95% Other	2% Chrysotile
389924 12A SW Entry Roof Analyst: Dave Cousino	Roof Shingles	Black Non-Fibrous Homogenous	12% Cellulose	88% Other	None Detected
389925 12B SW Entry Roof Analyst: Dave Cousino	Roof Shingles	Black Non-Fibrous Homogenous	6% Cellulose	94% Other	None Detected
389926 13A KN 8 Analyst: Dave Cousino	Linoleum Under Mat 07	Tan Fibrous Homogenous	30% Cellulose	70% Other	None Detected

ETL, Inc. maintains liability limited to cost of analysis. This report relates only to the samples reported and may not be reproduced without written approval by ETL, Inc. Test Method EPA 600/R-93-116 & EPA 600/M4-82/020 or NYSDOH-ELAP item 198.1 and/or 198.6 was used to analyze all samples. Matrix interference and/or resolution limits (i.e. detecting asbestos in non-friable organically bound materials) may yield false results in certain circumstances. Quantitative transmission electron microscopy (TEM) is currently the only method that can pronounce materials as non-asbestos containing. Interpretation and use of test results are the responsibility of the client. ETL, Inc. is not responsible for the accuracy of the results when requested to physically separate and analyze layered samples. Any PLM results below 10% should be re-analyzed using the EPA recommended Point Count method. Any material that has greater than 1% asbestos content is considered to be an Asbestos Containing Material (ACM). These materials are regulated by both OSHA and the EPA and must be treated accordingly. Results are related to only to samples that were tested.

NVLAP LAB CODE 201028-0

Certificate of Analysis

Environmental Testing Laboratories, Inc.
38900 Huron River Drive,
Suite 200, Romulus, Michigan 48174,
(734) 955-6600, Fax: (734) 955-6604

Polarized Light Microscopy Asbestos Analysis Report

To : Environmental Testing And Consulting Inc.
38900 Huron River Drive
Romulus,MI 48174

Location : Vacant Residence
1095 1st St., Muskegon, MI

ETC Job : 177225
Client Project : N/A
Date Collected : 01/19/2016
Date Received : 01/21/2016
Date Analyzed : 01/22/2016

Sample	Description	Appearance	% Fibrous	% Non-Fibrous	% Asbestos
389927 13B KN 8 Analyst: Dave Cousino	Linoleum Under Mat 07	Tan Fibrous Homogenous	40% Cellulose	60% Other	None Detected
389928 14A Ext Near W Entry Analyst: Dave Cousino	House Wrap	Black Fibrous Homogenous	15% Cellulose	85% Other	None Detected
389929 14B Ext Near W Entry Analyst: Dave Cousino	House Wrap	Black Fibrous Homogenous	30% Cellulose	70% Other	None Detected
389930 15A Closet Entry 14 Analyst: Dave Cousino	Mozaic Linoleum	Beige Fibrous Homogenous	12% Cellulose	88% Other	None Detected
389931 15B Closet Entry 14 Analyst: Dave Cousino	Mozaic Linoleum	Beige Fibrous Homogenous	20% Cellulose	80% Other	None Detected
389932 16A Closet Entry 14 Analyst: Dave Cousino	Square Pattern Linoleum	Beige/Green Fibrous Homogenous	15% Cellulose	85% Other	None Detected
389933 16B Closet Entry 14 Analyst: Dave Cousino	Square Pattern Linoleum	Beige/Green Fibrous Homogenous	30% Cellulose	70% Other	None Detected

ETL, Inc. maintains liability limited to cost of analysis. This report relates only to the samples reported and may not be reproduced without written approval by ETL, Inc. Test Method EPA 600/R-93-116 & EPA 600/M4-82/020 or NYSDOH-ELAP item 198.1 and/or 198.6 was used to analyze all samples. Matrix interference and/or resolution limits (i.e. detecting asbestos in non-friable organically bound materials) may yield false results in certain circumstances. Quantitative transmission electron microscopy (TEM) is currently the only method that can pronounce materials as non-asbestos containing. Interpretation and use of test results are the responsibility of the client. ETL, Inc. is not responsible for the accuracy of the results when requested to physically separate and analyze layered samples. Any PLM results below 10% should be re-analyzed using the EPA recommended Point Count method. Any material that has greater than 1% asbestos content is considered to be an Asbestos Containing Material (ACM). These materials are regulated by both OSHA and the EPA and must be treated accordingly. Results are related to only to samples that were tested.

NVLAP LAB CODE 201028-0

Certificate of Analysis

Environmental Testing Laboratories, Inc.
38900 Huron River Drive,
Suite 200, Romulus, Michigan 48174,
(734) 955-6600, Fax: (734) 955-6604

Polarized Light Microscopy Asbestos Analysis Report

To : Environmental Testing And Consulting Inc.
38900 Huron River Drive
Romulus,MI 48174

Location : Vacant Residence
1095 1st St., Muskegon, MI

ETC Job : 177225
Client Project : N/A
Date Collected : 01/19/2016
Date Received : 01/21/2016
Date Analyzed : 01/22/2016

Sample	Description	Appearance	% Fibrous	% Non-Fibrous	% Asbestos

Lab Supervisor/Other Signatory

Analyst: Dave Cousino

400 Point Count Results by EPA 600/R-93/116 PLM (denoted by "PC")
Item 198.1: PLM Methods for Identifying and Quantitating Asbestos in Bulk Samples
Item 198.6: PLM Methods for Identifying and Quantitating Asbestos in Non-Friable Organically Bound Bulk Samples
EPA 600/R-93/116: Method for Determination of Asbestos in Bulk Building Materials
EPA 600/M4-82-020: Interim Method for Determination of Asbestos in Bulk Insulation Samples

ETL, Inc. maintains liability limited to cost of analysis. This report relates only to the samples reported and may not be reproduced without written approval by ETL, Inc. Test Method EPA 600/R-93-116 & EPA 600/M4-82/020 or NYSDOH-ELAP item 198.1 and/or 198.6 was used to analyze all samples. Matrix interference and/or resolution limits (i.e. detecting asbestos in non-friable organically bound materials) may yield false results in certain circumstances. Quantitative transmission electron microscopy (TEM) is currently the only method that can pronounce materials as non-asbestos containing. Interpretation and use of test results are the responsibility of the client. ETL, Inc. is not responsible for the accuracy of the results when requested to physically separate and analyze layered samples. Any PLM results below 10% should be re-analyzed using the EPA recommended Point Count method. Any material that has greater than 1% asbestos content is considered to be an Asbestos Containing Material (ACM). These materials are regulated by both OSHA and the EPA and must be treated accordingly. Results are related to only to samples that were tested.

ENVIRONMENTAL TESTING LABORATORIES, INC
38900 Huron River Drive
Romulus, Michigan 48174
(734) 955-6600
Fax: (734) 992-2261
www.2etl.com

Bulk Asbestos Chain of Custody

ETL Project #:

AARON YANKEE

Client: ETC	Contact: STUART YANKEE	Project Location/name: MUSKEGON BLIGHT 1095 1ST ST. MUSKEGON
Address: Romulus	Phone:	
	Fax:	
	E-mail:	Client Project #: 177225
Please Provide Results: ☐ Email ☐ Fax ☐ Verbal ☐ Other _____		Date Sampled: 1-19-16

Turnaround Time (TAT): ☐ RUSH ☐ Same Day ☐ 24 hr ☐ 48 hr ☐ Standard (3+ days) ☐ Other _____

PLM Instructions
(Check all that apply)

☒ PLM EPA600/R-93/116, 1993 (Standard method)	☒ Stop at 1st Positive - *Clearly mark Homogenous Group*
☐ Point Counting: 400 Points*	
☐ PLM Non-Building Material (Dust, Wipe, Tape)	☐ Soil or Vermiculite Analysis *

** Additional charge and turnaround may be required*

Lab ID	Sample ID	Sample Location	Material Description
389897	01A - 01G	SEE ATTACHED	SAMPLE
	02A - 16B	SUMMARY	Sheets
389833			

			Date	Time
Relinquished (Name/Organization):	STUART YANKEE/ETC	J.P.	1-20-16	am/pm
Received (Name/ETL):			1/21/16	am/pm
Stereoscopical Analysis (Name/ETL):	D.C.	J.P.	1/21/16	3:00 am/pm
Sample Login (Name/ETL):			1/21/16	am/pm
Analysis (Name/ETL):	D.C.		1/21/16	3:00 am/pm
QA/QC Review (Name/ETL):				am/pm

Special Instructions:	Remarks

Page ____ of ____

Asbestos Material Sampling Summary Sheet
Surfacing materials

Revision date 5/7/2015

Job #: 177225 | **Building:** 1095 1ST St. Muskegon 49440 | **Date:** 1-19-16

Material no.	Material Description	Friable (F) / Non-Friable (NF)	Sample Letter	Sample Location	Material Located throughout bldg (Please List all Rooms)	Quantity	Picture #
01	Material: PLASTER BASE COAT WHITE FINISH COAT	F	A	389897	THROUGHOUT	10,000 SF	
			B	389898			
			C	389899			
			D	389900			
			E	389901			
			F	389902			
			G	389903			
	Material:						
	Material:						

1000 SF = 3 samples 1000 - <5000 = 5 samples >5000 = 7 samples

Asbestos Material Sampling Summary Sheet
Miscellaneous materials

Revision date 5/7/2015

Job #: 177225 | Building: 1095 1ST. ST. Muskegon | Date: 1-19-16

Material no.	Material Description	Friable (F) / Non-Friable (NF)	Sample Letter	Sample Location	Material Located throughout bldg (Please List all Rooms)	Quantity	Picture #
02	Material: CEILING TILE Description SMOOTH WHITE ORANGE FIBER	F	A B	DINING 12 CEILING LANDING 4 CEILING	1,3,4,5,6,7,8 9,10,11,12,15 16.	1,700 SF	389904 389905
03	Material: FLOOR TILE Description GRAY STICK ON	NF	A B	BED 13 BED 13	13,14	150 SF	389906 389907
04	Material: FLOOR TILE Description GRAY TILE PATTERN	F	A B	DINING 12 130 KITCHEN 11	11,12	300 SF	389908 389909
05	Material: LINOLUM OVER TILE Description BLUE PATTER	F	A B	BATH 15 1ST FL BATH 9 2ND FL	9,15	50 SF	389910 389911
06	Material: TILE UNDER LINOLEUM Description CREAM	F	A B	BATH 9,15 1ST FL BATH 9 2ND FL	9,15	50 SF	389912 389913
07	Material: LINOLEUM Description OFF WHITE	F	A B	KIT 8 2ND FL KIT 8 2ND FL	8	300 SF	389914 389915
08	Material: DRYWALL Description	F	A B	ENTRY 2 W WALL LIVING 1 S. WALL	THROUGHOUT	6,000 SF	389916 389917
09	Material: SEAM TAPE Description	F	A B	ENTRY 2 LIVING 1			389918 389919
10	Material: MUD/JOINT COMPOUND Description	F	A B	ENTRY 2 LIVING 1			389920 389921
11	Material: WINDOW GLAZING Description WHITE	F	A B	EXT NORTH EXT SOUTH	EXTERIOR	20 UNITS	389922 389923

2 samples

Asbestos Material Sampling Summary Sheet
Miscellaneous materials

Revision date 5/7/2015

Job #: 177225 | Building: 1095 1st St. Muskegon | Date: 1-19-16

Material no.	Material Description	Friable (F) / Non-Friable (NF)	Sample Letter	Sample Location	Material Located throughout bldg (Please List all Rooms)	Quantity	Picture #
12	Material: Roof Shingles Description: BLACK	NF	A B	SW ENTRY Roof " " "	EXT	2200 SF	389924 389925
13	Material: LINOLEUM Description: TAN PATTERN UNDER (7)	F	A B	KITCH 8 " "	8	300 SF	389926 389927
14	Material: HOUSE WRAP Description: BLACK	F	A B	EXT NEAR W. ENTRY " " " "	EXT.	3400 SF	389923 389929
15	Material: LINOLEUM Description: BEIGE MOZAIC	F	A B	CLOSET ENTRY 14 " " " "	14 closet	25 SF	389930 389931
16	Material: LINOLEUM Description: BEIGE GREEN SQ.	F	A B	CLOSET ENTRY 14 " " "	14 closet	25 SF	389932 389933
	Material: Description:						
	Material: Description:						
	Material: Description:						
	Material: Description:						
	Material: Description:						

2 samples

APPENDIX B

SITE MAP

1095 1st St., Muskegon, MI 49440

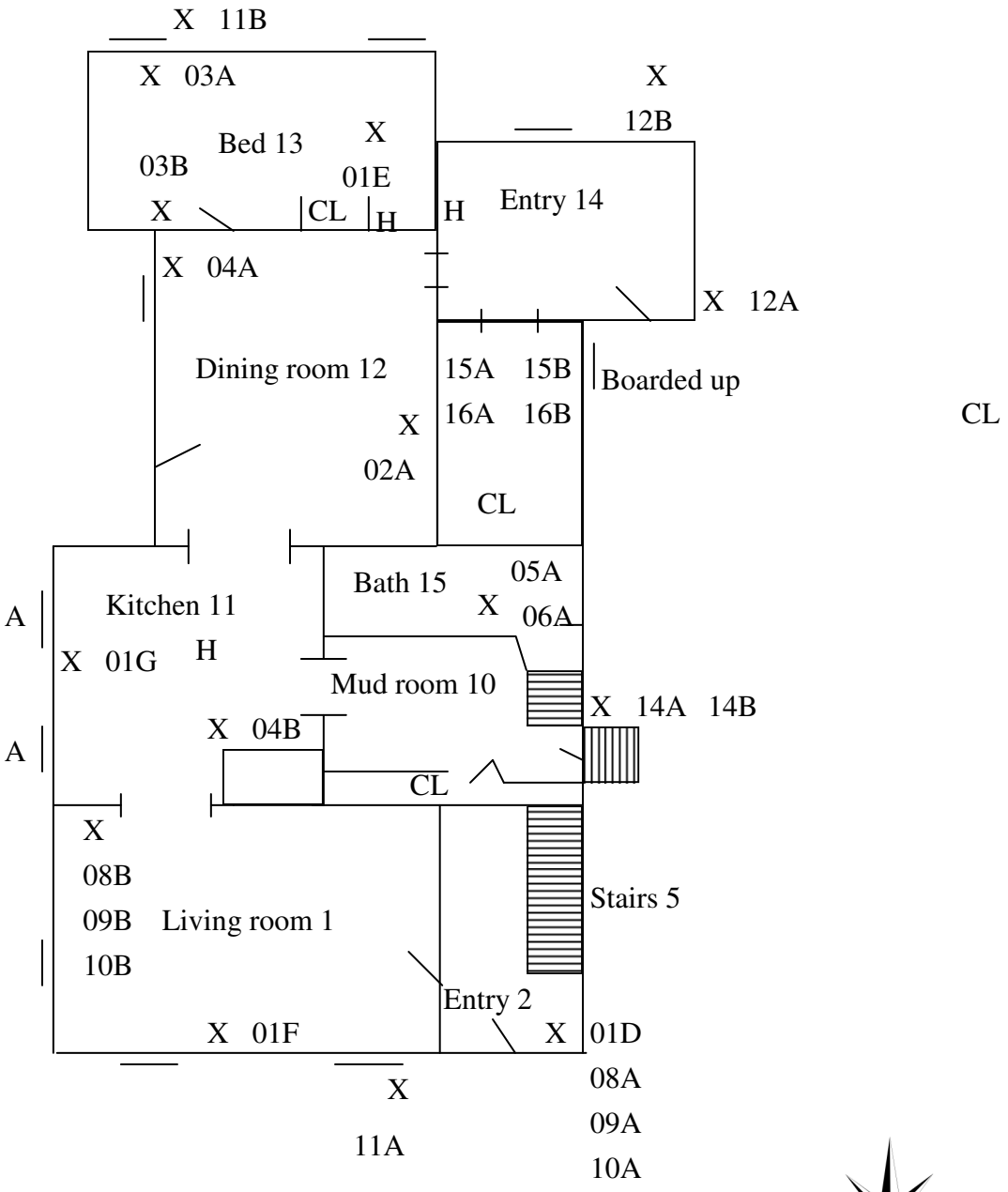

Please Note: This is a rough floor plan only. All items, (doorways, Windows, etc.) may not be included in this illustration. Also, room and component sizes are not drawn to scale.

City of Muskegon
177225

2nd floor 1095 1st St., Muskegon, MI 49440

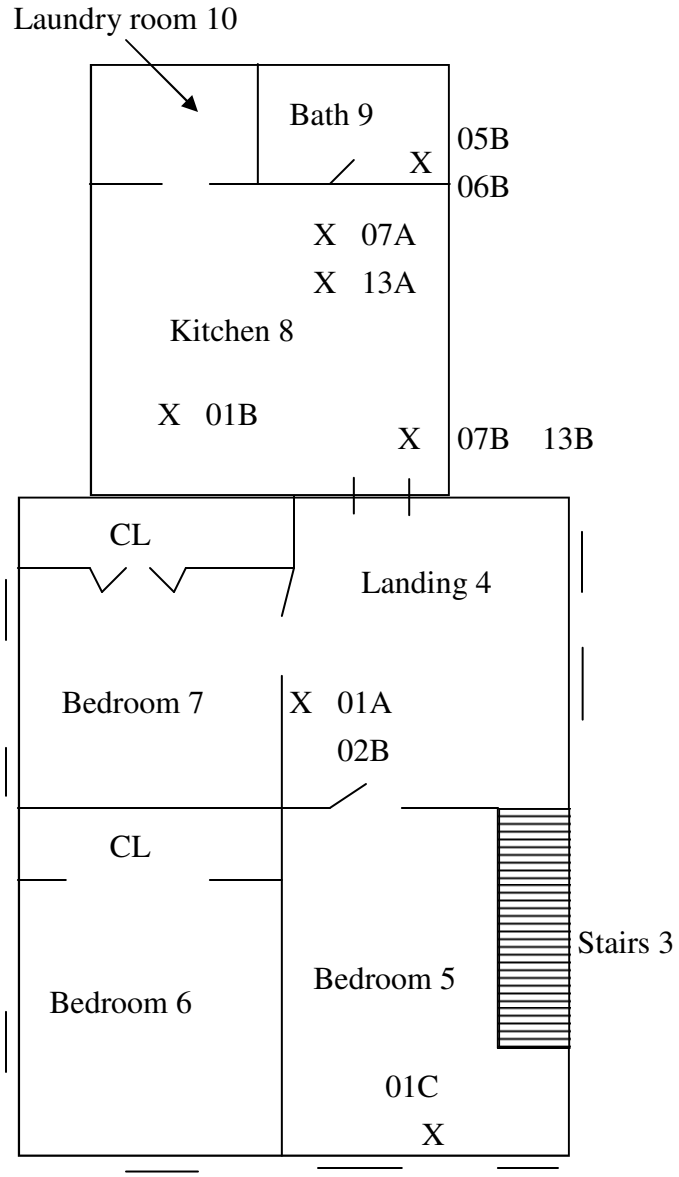

N

Please Note: This is a rough floor plan only. All items, (doorways, Windows, etc.) may not be included in this illustration. Also, room and component sizes are not drawn to scale.

City of Muskegon
177225

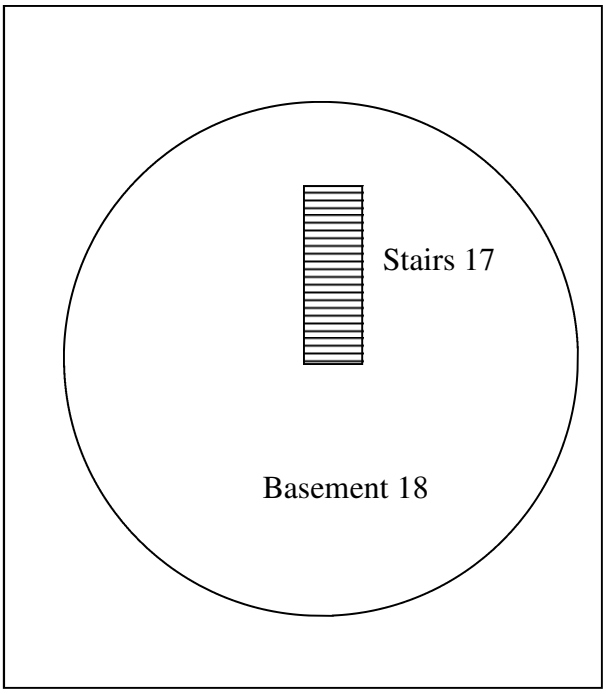

Please Note: This is a rough floor plan only. All items, (doorways, Windows, etc.) may not be included in this illustration. Also, room and component sizes are not drawn to scale.

N

City of Muskegon
177225

APPENDIX C

PHOTOGRAPHS

Side A

Side B

Side C

Side D

Hazard :Light Ballasts/Fluorescent Bulbs

Hazard : Tire , Bedroom 13

Hazard :Tire, entry, 14.

APPENDIX D

STATE OF MICHIGAN NOTIFICATION OF INTENT TO REMOVE/DEMOLISH

NOTIFICATION OF INTENT TO RENOVATE/DEMOLISH

MICHIGAN DEPARTMENT OF ENVIRONMENTAL QUALITY (MDEQ) AIR QUALITY DIVISION
NESHAP, 40 CFR Part 61, Subpart M

MICHIGAN DEPARTMENT OF LICENSING AND REGULATORY AFFAIRS (LARA), ASBESTOS PROGRAM, P.A. 135 OF 1986, AS AMENDED, Section 220 (1-4) or (8)

DEQ/LARA USE ONLY

Postmark Date ____/____/____ Rec'd Date ____/____/____

Emergency Date ____/____/____ Valid No. _____

☐ OK ☐ Send Def Ltr. Date of Def Ltr. ____/____/____

FOLLOW UP ____/____/____ Spoke w/ _____

Comments: _____

Notification No. _____ Trans No. _____

Calculate LARA Asbestos Project Fee: (1% Project Fee)

Total Project Cost: _____ x 0.01 = _____

Type of Contractor: _____ License No.: _____

Licensing Authority: _____

1. NOTIFICATION:

Date of Notification: _____

Date of Revision(s): _____

Notification Type: ☐ Original ☐ Revised ☐ Canceled ☐ Annual

Mark appropriate boxes: (both DEQ and LARA may apply):

DEQ (NESHAP) ***[260 ln. ft./160 sq. ft. or more is threshold]***

☐ Planned Renovation – 10 **working** days notice
☐ Emergency Renovation
☐ Scheduled Demolition – 10 **working** days notice
☐ Intentional Burn – 10 **working** days notice
☐ Ordered Demolition

LARA (MIOSHA) ***[Will not accept annual notifications]***

☐ Demo, Reno, Encap. (>10 ln. ft./15 sq. ft.) 10 **calendar** days notice
☐ Emergency Renovation/Encapsulation

2. PROJECT SCHEDULE:

	START DATE	END DATE
* Renovation		
+Asb. Removal		
+Demolition:		
Encapsulation:		

Work Schedule: Please indicate the anticipated days of the week and work hours for the purpose of scheduling a compliance inspection.

	Days of the Week	Work Hours
Asb. Removal:		
Demolition:		
Encapsulation:		

* Includes setup, build enclosure, asbestos removal, demobilizing, etc.
+Include **only** those dates you are conducting asbestos removal/demo.

☐ Check here if this is a multi-phased project, attach a schedule showing the start/end date of each phase.

3. ABATEMENT CONTRACTOR: Internal Project #: _____

Name: _____
Mailing Address: _____
City/State/Zip: _____
E-mail: _____
Contact: _____ Phone: _____

4. DEMOLITION CONTRACTOR: Internal Project #: _____

Name: _____
Mailing Address: _____
City/State/Zip: _____
E-mail: _____
Contact: _____ Phone: _____

5. FACILITY OWNER: ("Facility" includes Bridges)

Name: _____
Mailing Address: _____
City/State/Zip: _____
E-mail: _____
Contact: _____ Phone: _____

6. FACILITY DESCRIPTION:

Facility Name: _____
Location Address/Description: _____
_____ If Apt. # of units: _____
City/Twp. _____ State: _____ Zip Code: _____
County: _____ Nearest Crossroad: _____
Size: (sq. ft.) _____ No. of Floors: _____ Floor No.: _____
Age: _____ Present Use: _____ Prior Use: _____
Specific Location(s) in Facility: _____

7. DISPOSAL SITE:

Name: _____
Location Address: _____
City/State/Zip: _____

8. WASTE TRANSPORTER 1:

Name: _____
Address: _____
City/State/Zip: _____
Phone: _____

WASTE TRANSPORTER 2:

_____
_____
_____
_____

9. ORDERED DEMOLITIONS: (See NESHAP regulations for definition of "Ordered Demolition.") A copy of the official Order must accompany this notification.

Gov't Agency Ordering Demo: _____

Name/Title of Person Signing Order: _____

_____

Date of Order: _____ Date Ordered to Begin: _____

10. IS ASBESTOS PRESENT? ☐ Yes ☐ No ☐ To be removed prior to demolition

Estimate the amount of asbestos: Include RACM (Regulated Asbestos Containing Material) to be removed, encapsulated, etc. Also include the amount and type (floor tile, roofing, etc.) of non-friable Category I and/or Category II ACM that **will not** be removed prior to demolition. (**NOTE:** In a demolition, cementatious ACM cannot remain in a structure, as it is likely to become regulated in the demolition/handling process. It must be removed prior to demolition.)

RACM to be Removed	RACM to be Encapsulated	Non-friable ACM **not** removed prior to demo. Category I	Category II	Units of Measure	
				☐ Ln. Ft.	☐ Ln. M.
				☐ Sq. Ft.	☐ Sq. M.
				☐ Cu. Ft.*	☐ Cu.M.*

*Volume (cubic ft./meters) should be used only if unable to measure by linear/square measure (example: asbestos has fallen off of surface).

(continued on reverse side)

11. PROJECT DESCRIPTION: Complete **A) for Renovation** (asbestos removal/encapsulation) and/or **B) for Demolition:**

A) RENOVATION: Mark all surfaces/types of RACM to be removed:
☐ Piping ☐ Fittings ☐ Boiler(s) ☐ Tanks(s)
☐ Beam(s) ☐ Duct(s) ☐ Tunnel(s) ☐ Ceiling Tile(s)
☐ Mag Block ☐ Other (describe)_____

Encapsulation (for LARA): Mark surfaces/types to be encapsulated:
☐ Piping ☐ Fittings ☐ Boiler(s) ☐ Tank(s)
☐ Beam(s) ☐ Duct(s) ☐ Tunnel(s) ☐ Ceiling Tile(s)
☐ Other (describe) _____

Method of removal: Describe how the asbestos will be removed from the surface (example: glove bag, scrape with hand tools, cut in sections and carefully lower, etc.): _____

B) DEMOLITION: Describe the method of demolition of facility, bridge, etc., and indicate if complete or partial. If partial, describe which part of facility bridge, etc., will be demolished: _____

12. ENGINEERING CONTROLS: Describe work practices and engineering controls used to prevent visible emissions before, during, and after removal, and until proper disposal: _____

13. UNEXPECTED ASBESTOS: Describe the steps you intend to follow in the event that unexpected RACM is found or previously non-friable asbestos becomes friable (crumbled, pulverized, reduced to powder, etc.) and therefore regulated: _____

14. PROCEDURE(S) USED TO DETECT THE PRESENCE OF ASBESTOS: A) Indicate how you determined whether or not asbestos is in the facility. If analytical sampling was used, describe method of analysis. (The determination of the presence or absence of asbestos must be made prior to submitting a renovation/demolition notification.): _____

B) Name, address, and phone number of company performing asbestos survey: _____

C) Name, accreditation number of inspector, and date of inspection: _____

15. EMERGENCY RENOVATIONS: Date/time of emergency: _____ Describe the sudden, unexpected event: _____

Explain how the event caused unsafe conditions, and/or would cause equipment damage and/or an unreasonable financial burden: _____

16. I certify that an individual trained in the provisions of 40 CFR Part 61, Subpart M, will be on-site during the renovation and during demolition involving RACM above the threshold and/or during an ordered demolition. Evidence that this person has completed the required training will be available for inspection at the renovation or demolition site.

Signature of Owner or Abatement Contractor *Date* *Signature of Owner or Demolition Contractor* *Date*

17. Signature Requirements for Projects with Negative Pressure Enclosures: (required by LARA)
Per Section 221(1)(2) of P.A. 135 of 1986, as amended, clearance air monitoring is required for any asbestos abatement project involving 10 linear feet/15 square feet or more of friable material which is performed within a negative pressure enclosure. ***I (the building owner or lessee) have been advised by the contractor of my responsibility under Act 135 to have clearance air monitoring performed on this project.***

Signature of Building Owner or Lessee *Date* *Signature of Asbestos Abatement Contractor Representative* *Date*

NOTE: **It is not mandatory that a signed copy be sent to LARA unless requested.** For affected projects, this section of the notification form must be completed, signed, and made part of **your** records before the project begins.

18. I certify that the above information is correct:

Printed Name of Owner/Operator *Date* *Signature of Owner/Operator* *Date*

MAILING ADDRESSES/PHONE NUMBERS: (See Item 1 to determine which agency requirements/regulations are applicable to your project.)

For **Public Act 135 of 1986, as amended, Section 220 (1-4) or (8),** mail to address below. For more info visit: http://www.michigan.gov/asbestos

MIOSHA Asbestos Program
LARA, CSHD
P.O. Box 30671
Lansing, MI 48909-8171

517.636.4551 (office), 517.322.1713 (fax)

For **NESHAP Demolitions/Renovations, 40 CFR, Part 61, Subpart M**, mail notifications to the appropriate address below (by county of subject facility): For more info visit http://www.michigan.gov/deq click on Air, then Asbestos NESHAP Program.

All Counties (except Wayne County)

NESHAP Asbestos Program
DEQ, AQD
P.O. Box 30260
Lansing, MI 48909-7760

517.241.7463 (Office)
517.373.7064 (Revision Line)

Wayne County Only

NESHAP Asbestos Program
Detroit Field Office, DEQ, AQD
Cadillac Place, Suite 2-300
3058 West Grand Boulevard
Detroit, MI 48202

313.456.4686 (Office)
313.456.2558 (Revision Line)